PENSKE RACING SHOCKS®

Adjustable Shocks Technical Manual

8100, 8660, 8760 Series

Main Office

150 Franklin St. • P.O. Box 1056
Reading, PA 19603

(610) 375-6180 • (610) 375-6190 Fax

Southeast

771-28 Fentress Blvd. • P.O. Box 11586
Daytona Beach, FL 32120

(386) 274-5336 • (386) 274-5442 Fax

Midwest

12666 US-12 • P.O. Box 666
Brooklyn, MI 49230

(517) 592-6681 • (517) 592-3696 Fax

Table of Contents

	Page
8100 Series Shock	
Parts List	2
Damper Specifications and Part Lengths	3
8760 Series Shock	
Parts List	4
Damper Specifications and Part Lengths	5
8100 Series Compression Adjuster	
Parts List	6
Operational Guide	7
8660 Series Compression Adjuster	
Parts List	8
Operational Guide	9
8760 Series Compression Adjuster	
Parts List	10
Operational Guide	11
Rebound Adjusters	12
Disassembly / Assembly Instructions	13
Suggested Maintenance	14
Trouble Shooting	14
Valving	
General Valving Characteristics	15
A Guide To Damper Tuning	16
Basic Start-up Procedure	17
Valve Stacks	18
VDP and Digressive Valving Information Options	19
VDP 55mm Linear Base Shim	19
Preload Shim Spacers	19
Pistons	
Flow Rate Through Multiple Bleed Holes	20
Piston Selection	21
Linear Piston	22
Digressive Piston	23
Velocity Dependent Piston (VDP)	24
Damping Adjustments	26
Dyno Graph Overview	28
Notes	32

REV: 3/27/01
#5

8100 Series Parts List

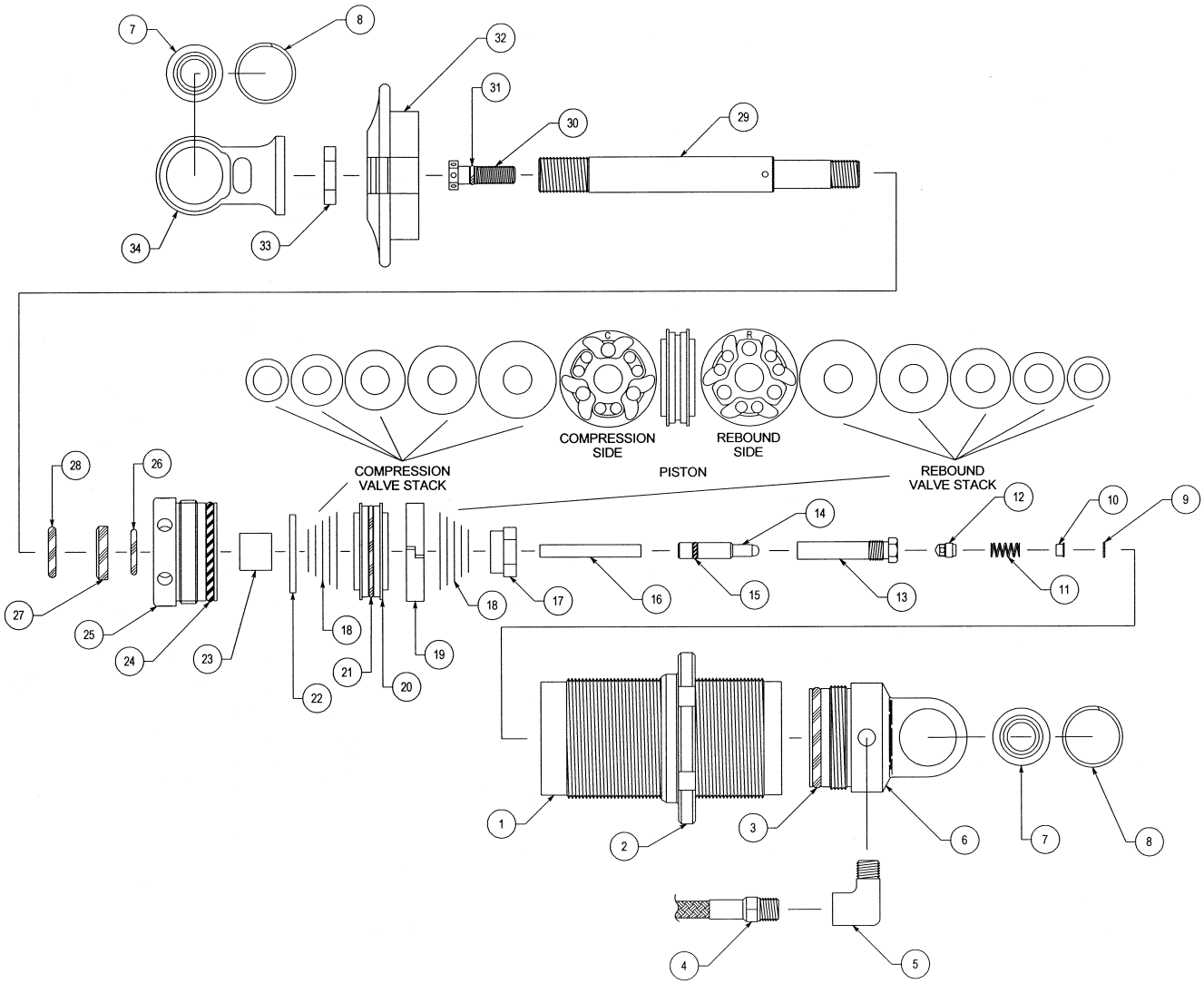

ITEM NO.	PART NO.	DESCRIPTION
		Aluminum Coil-over Double Adjustable
1	BD-81__*	Body, Aluminum Coil-over (10.0" - 24.0")
2	RH-812__*	Ride Height Adjuster, 8100, (2.25" or 2.50")
3	OR-2221-B	O-Ring, 2-221, Buna 70
4	HO-87__*	Hose (4" - 36" in 1" increments)
5	FT-__*	Fitting, (45° or 90°), 1/8" NPT
6	BC-81__*	Body Cap, 8100, (0°, 45°, 90°, 135°)
7	MO-8T	Mono Ball, .500 ID, Teflon
	MO-15T	Monoball, 15mm ID, Teflon
8	RR-16	Retaining Ring, 1.025 Spiroloc
	JT-76RD	**Jet, Rebound Complete (Includes Items 9-13)**
9	RR-05	Retaining Ring, .250 Internal
10	JT-76HAT	Jet, Top Hat
11	SP-15	Spring, (FF71)
12	JT-76POP	Jet, Poppet
13	JT-RDHSNG	Jet, Rebound, Straight Thru
14	NE-76	Needle
15	OR-2007-B	O-Ring, 2-007, Buna 70
16	MR-8100	Metering Rod
17	NT-02R	Ring Nut, .500 x 20

ITEM NO.	PART NO.	DESCRIPTION
18	VS-__*	Valve Stack
19	PB-55	Piston Band, 55mm
20	PI-____*	Piston
21	OR-2028-B	O-Ring, 2-028, Buna 70
22	VW-99	Top Out Plate, 1.375 x .500
	AS-76SB	**Assembly, Shaft Bearing Complete (Includes Items 23-27)**
23	BU-10DU10	Bushing, DU .625 x .625
24	OR-2221-B	O-Ring, 2-221, Buna 70
25	SB-765	Shaft Bearing, 55mm
26	OR-2114-V	O-Ring, 2-114, Viton 75
27	SL-09	Shaft Wiper, .625 Poly (Blue)
28	OR-2312-B	O-Ring, 2-312, Buna 70
29	SH-_____*	Shaft, Adjustable, (10.0" - 24.0")
30	RS-81	Rebound Screw, Adjustable Shaft
31	OR-2008-B	O-Ring, 2-008, Buna 70
32	SR-812__*	Spring Retainer, 8100, (2.25" or 2.50")
33	NT-04J	Jam Nut, .625 x 18
34	EY-81160	Eyelet, 1.60 Sweep, 0°
	EY-811690	Eyelet, 1.60 Sweep, 90°
	EY-81200	Eyelet, 2.00 Sweep, 0°
	EY-81230	Eyelet, 2.30 Sweep, 0°

See Pages 6 and 7 for 8100 Series Adjuster.
*** Incomplete Part Number**

8100 Damper Specifications

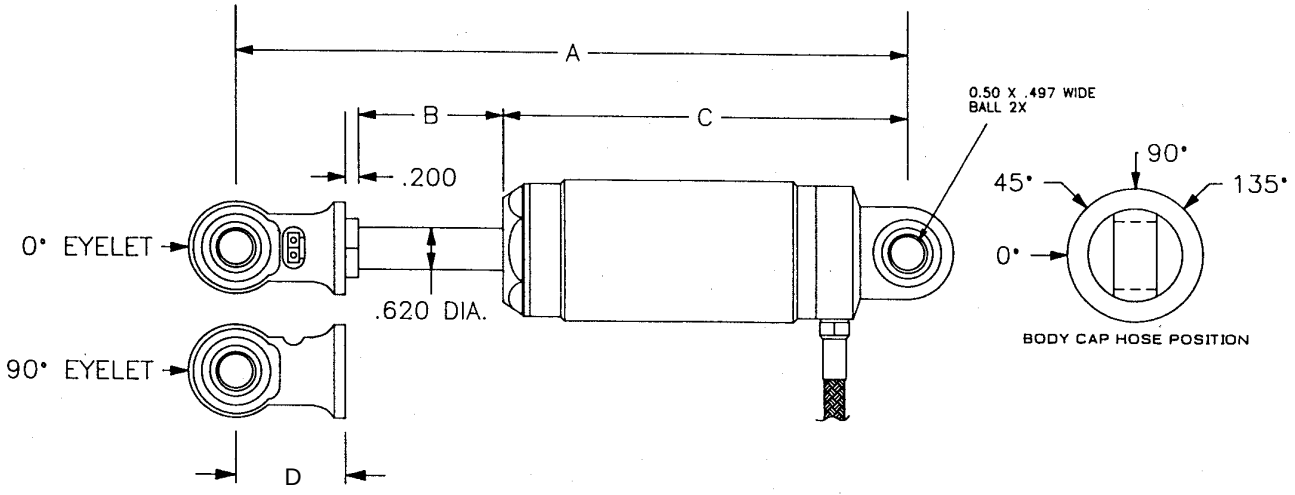

A	B	C
10.0	2.125	6.075
10.5	2.375	6.325
11.0	2.625	6.575
11.5	2.875	6.825
12.0	3.125	7.075
12.5	3.375	7.325

A	B	C
13.0	3.625	7.575
13.5	3.875	7.825
14.0	4.125	8.075
14.5	4.375	8.325
15.0	4.625	8.575
15.5	4.875	8.825

A	B	C
16.0	5.125	9.075
17.5	5.875	9.875
18.0	6.125	10.075
20.0	7.125	11.075
24.0	9.125	13.075

D
1.6 (0° or 90°) (std.)
2.0 (0°)
2.3 (0°)

8100 Series Part Lengths

		SH-___A		BD-81___
Part Suffix	Shock Size	Shaft Length	Metering Rod Length	Body Length
100	10.0”	5.625	1.750	4.275
105	10.5”	5.875	2.000	4.525
110	11.0”	6.125	2.250	4.775
115	11.5”	6.375	2.500	5.025
120	12.0”	6.625	2.750	5.275
125	12.5”	6.875	3.000	5.525
130	13.0”	7.125	3.250	5.775
135	13.5”	7.375	3.500	6.025
140	14.0”	7.625	3.750	6.275
145	14.5”	7.875	4.000	6.525
150	15.0”	8.125	4.250	6.775
155	15.5”	8.375	4.500	7.025
160	16.0”	8.625	4.750	7.275
175	17.5”	9.375	5.500	8.025
180	18.0”	9.625	5.750	8.275
200	20.0”	10.500	6.625	9.400
220	22.0”	11.500	7.625	10.400
240	24.0”	12.500	8.625	11.400

8760 Series Parts List

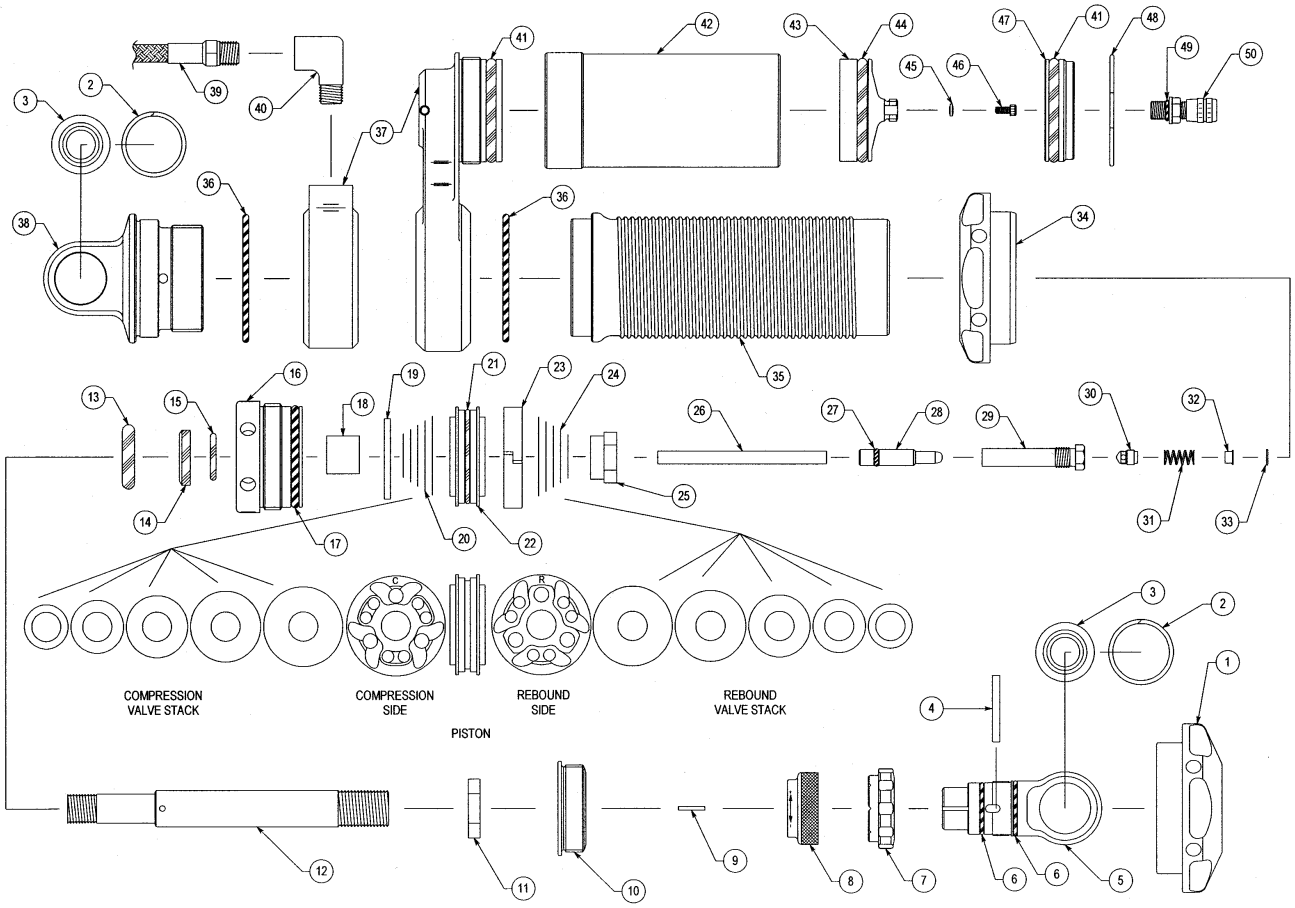

ITEM NO.	PART NO.	DESCRIPTION
		8760 Aluminum Coil-over (Piggyback) **8760 Aluminum Coil-over (Remote Reservoir)**
1	SR-762__*	Spring Retainer, 8760, (2.00", 2.25" or 2.50")
	AS-76EY__*	**Assembly, 8760 Eyelet Complete (2.1", 2.3",2.6")** **(Includes Items 2-8)**
2	RR-10	Retaining Ring, .875 Spiroloc
3	MO-8T20	Monoball, .500 ID x .875 OD
4	DO-09	Dowel Pin, 1/8" x 1 1/8"
5	EY-76__*	Eyelet, 8760, (2.10", 2.30", or 2.60")
6	OR-2017-B	O-Ring, 2-017, Buna 70
7	KN-76RD	Knob, Rebound Adjuster
8	CP-76RD	Cap, Rebound Adjuster
9	DO-06	Dowel Pin, 1/16" x 3/8"
10	SR-76SRM	Spring Retainer, 8760, Mount
11	NT-12J	Jam Nut, .562 x 18
12	SH-76___*	Shaft, 8760, (10.0" - 24.0")
13	OR-2312-B	O-Ring, 2-312, Buna 70
	AS-76SB__*	**Assembly, 8760 Shaft Bearing (45mm, 55mm)** **(Includes Items 14-18)**
14	SL-09	Shaft Wiper, .625 Poly (Blue)
15	OR-2114-V	O-Ring, 2-114, Viton 75
16	SB-76_	Shaft Bearing, 8760, (45mm or 55mm)
17	OR-2221-B	O-Ring, 2-221, Buna 70 (55mm)
	OR-2219-B	O-Ring, 2-219, Buna 70 (45mm)
18	BU-10DU10	Bushing, DU .625 x .625
19	VW-99	Top Out Plate, 1.375 x .500
20	VS-___*	Valve Stack
21	OR-2025-B	O-Ring, 2-025, Buna 70 (45mm)
	OR-2028-B	O-Ring, 2-028, Buna 70 (55mm)
22	PI-____*	Piston
23	PB-___*	Piston Band, (45mm or 55mm)
24	VS-___*	Valve Stack
25	NT-02R	Ring Nut, .500 x 20
26	MR-8760	Metering Rod

ITEM NO.	PART NO.	DESCRIPTION
27	OR-2007-B	O-Ring, 2-007, Buna 70
28	NE-76	Needle
	JT-76RD	**Jet, Rebound Complete** **(Includes Items 29-33)**
29	JT-RDHSNG	Jet, Rebound, Straight Thru
30	JT-76POP	Jet, Poppet
31	SP-15	Spring, (FF71)
32	JT-76HAT	Jet, Top Hat
33	RR-05	Retaining Ring, .250 Internal
34	RH-762__*	Ride Height Adjuster, 8760, (2.00", 2.25" or 2.50")
35	BD-76___*	Body, 8760, (55mm, 10.0" - 24.0") (45mm, 10.0" - 13.5")
36	OR-2136-B	O-Ring, 2-136, Buna 70 (55mm)
	OR-2133-B	O-Rint, 2-133, Buna 70 (45mm)
37	HG-76PB___*	Housing, Piggyback, (45mm or 55mm)
	CO-76____*	Collar, Body, (45mm or 55mm)
38	BC-76___*	Body Cap,8760, (45mm or 55mm)
	BC-76E___*	Body Cap, 8760, Extended (.250",.500",1.00") 55mm
39	HO-87__*	Hose (4" - 36" in 1" increments)
40	FT-__*	Fitting, (45° or 90°), 1/8" NPT
41	OR-2222-B	O-Ring, 2-222, Buna 70
42	RB-76_*	Reservoir Body, 8760, (4.00", 5.00" or 6.00")
43	PI-76	Piston, Floating, 1.75 Diameter
44	OR-4222-B	Quad Ring, 4-222, B-70
45	SL-87	Seal, Dowty
46	SC-18	Screw, SHCS, 4-40 x 1/4"
47	CP-76	Cap, Reservoir Port O-Ring
48	RR-06	Wire Ring, .0625 Wire Diameter x 1.900
	AS-76RESCAP	**Assembly, 8760 Reservoir Cap** **(Includes Items 47, 41, 49, 50)**
49	OR-2010-B	O-Ring, 2-010, Buna 70
50	IU-20-A	Air Valve, Port O-Ring, Aluminum
	IU-04	Valve Core, 2000 psi
	IU-06	Valve Cap, High Temperature

See Pages 8-11 for 8660 and 8760 Series Adjuster.
*** Incomplete Part Number**

8760 Series Damper Specifications

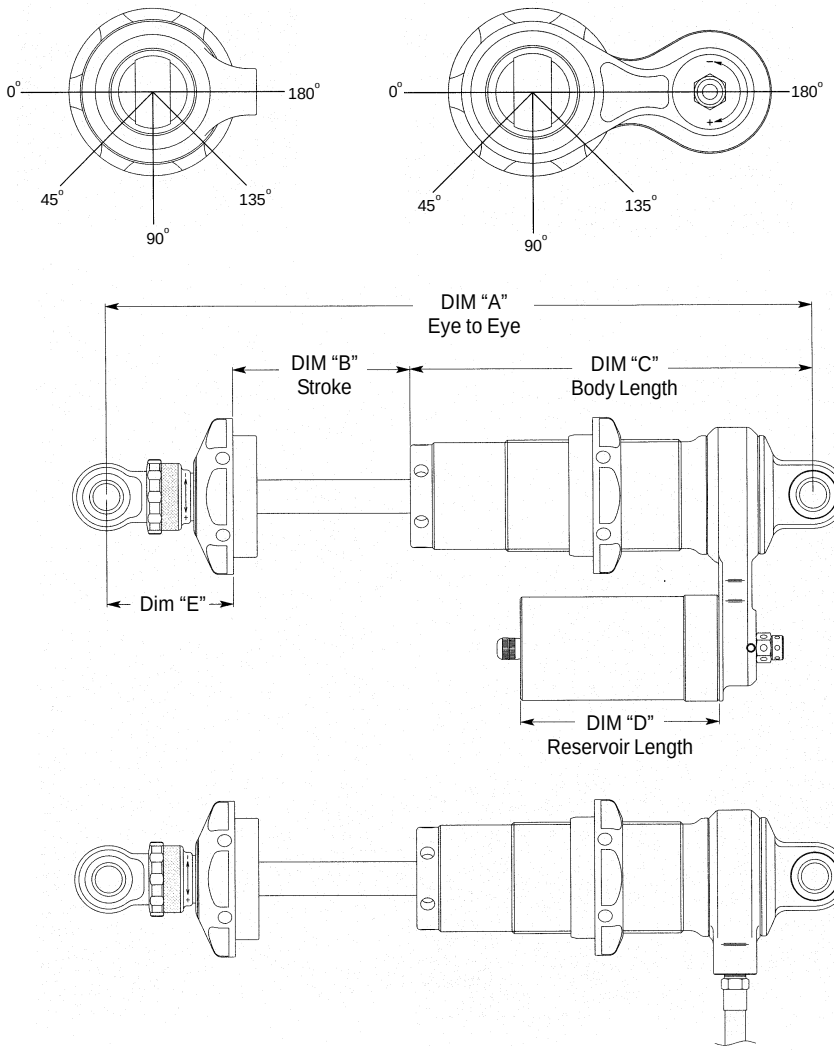

45mm (1.87 OD) = 2.00" ID Spring Hardware

55mm (2.06 OD) = 2.25" or 2.50" ID Spring Hardware

DIM "A"	DIM "B"	DIM "C"
10.0	1.875	5.850
10.5	2.125	6.100
11.0	2.375	6.350
11.5	2.625	6.600
12.0	2.875	6.850
12.5	3.125	7.100
13.0	3.375	7.350
13.5*	3.625	7.600
14.0	3.875	7.850
14.5	4.125	8.100
15.0	4.375	8.350
15.5	4.625	8.600
16.0	4.875	8.850
17.5	5.625	9.600
18.0	5.875	9.850
20.0	6.875	10.850
22.0	7.875	11.850
24.0	8.875	12.850

DIM "D"

4.00
5.00
6.00

DIM "E"

2.277 for 2.100 Eyelet (std.)
2.477 for 2.300 Eyelet
2.777 for 2.600 Eyelet

** 13.5 (DIM "A") max for 45mm*

8760 Series Part Lengths

Part Suffix	Overall Length	SH-76___ Shaft Length	Metering Rod Length	BD-76___ Body Length
100	10.0"	5.250	2.525	3.915
105	10.5"	5.550	2.775	4.165
110	11.0"	5.750	3.025	4.415
115	11.5"	6.000	3.275	4.665
120	12.0"	6.250	3.525	4.915
125	12.5"	6.500	3.775	5.165
130	13.0"	6.750	4.025	5.415
135	13.5"	7.000	4.275	5.665
140	14.0"	7.250	4.525	5.915
145	14.5"	7.500	4.775	6.165
150	15.0"	7.750	5.025	6.415
155	15.5"	8.000	5.275	6.665
160	16.0"	8.250	5.525	6.915
175	17.5"	9.000	6.275	7.665
180	18.0"	9.250	6.525	7.915
200	20.0"	10.250	7.525	8.915
220	22.0"	11.250	8.525	9.915
240	24.0"	12.250	9.525	10.915

8100 Series Compression Adjuster Parts List

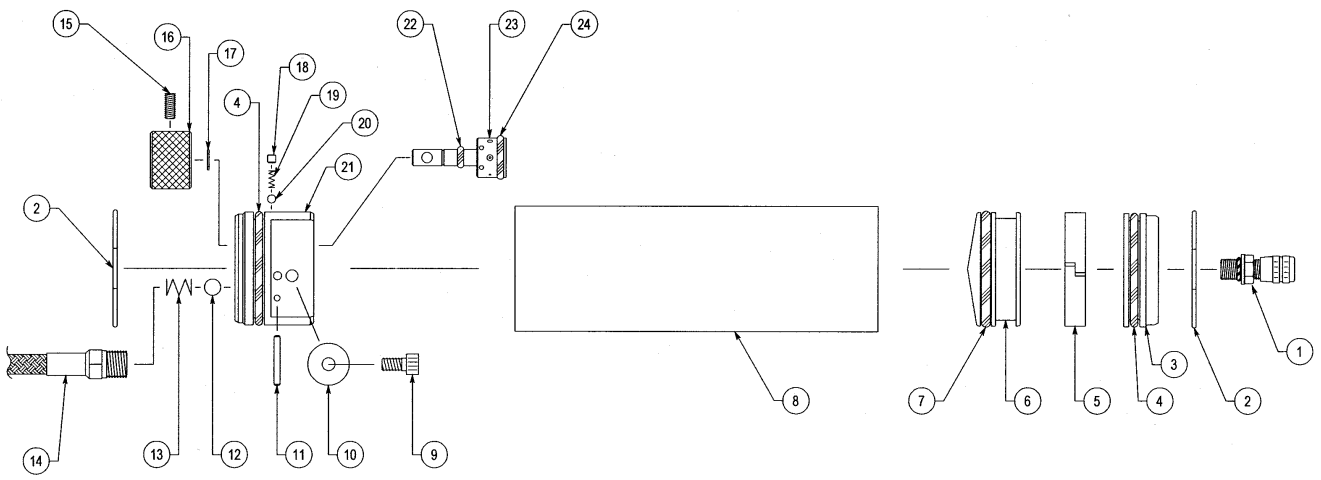

ITEM NO.	PART NO.	DESCRIPTION
		8100 Series CD Adjuster Option **Available in 5.5" and 7" Body Lengths**
1	IU-22-S	Air Valve, Port O-Ring, Steel
	IU-04	Valve Core, 2000 psi
	IU-06	Valve Cap, High Temperature
	OR-2010	O-Ring, 2-010, Buna 70
2	RR-06	Wire Ring, .0625 Wire Diameter x 1.900
3	CP-81R	Cap, 8100 Reservoir
4	OR-2221-B	O-Ring, 2-221, Buna 70
5	PB-55	Piston Band, 55mm
6	PI-81R	Piston, Reservoir 1.72 Diameter
7	OR-2323-M	O-Ring, 2-323, Moly 70
8	RB-81__*	Reservoir Body, 8100, (5.50" or 7.00")
9	SC-24	Screw, SHCS, 10-24 x 3/8"
10	VW-03	Washer, Valve, .635 x .015 x .191
11	DO-04	Dowel Pin, 3/32" x 3/4"

ITEM NO.	PART NO.	DESCRIPTION
12	BA-250-ST	Ball, Steel - 1/4"
13	SP-10	Spring, (TA2086)
14	HO-87__*	Hose (4" - 36" in 1" increments)
	AS-81UD	**Assembly, Update 8100 CD Adj with Knob (Includes Items 4, 9-13, 15-24)**
15	SC-02	Screw, Socket Set, 8/32" x 3/8"
16	KN-81	Knob, CD 8100
17	RR-02	Retaining Ring, .250 External
18	SC-08	Screw, Socket Set, 8-32 x 1/8"
19	SP-14	Spring, (A109)
20	BA-125-ST	Ball, Steel - 1/8"
21	HG-81D	Housing, CD 8100 Dished
22	OR-2006-B	O-Ring, 2-006, Buna 70
23	DR-81	Drum, CD 8100
24	OR-2013-B	O-Ring, 2-013, Buna 70

*** Incomplete Part Number**

8100 Series Compression Adjuster

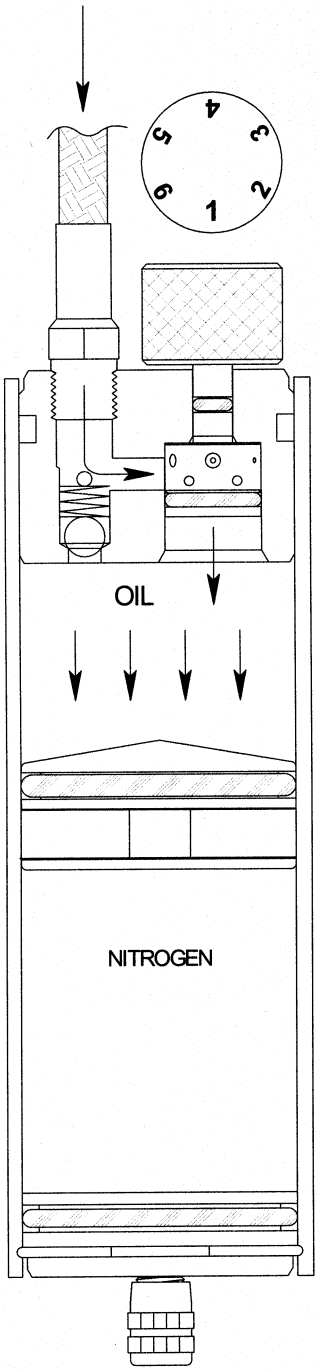

Figure 1

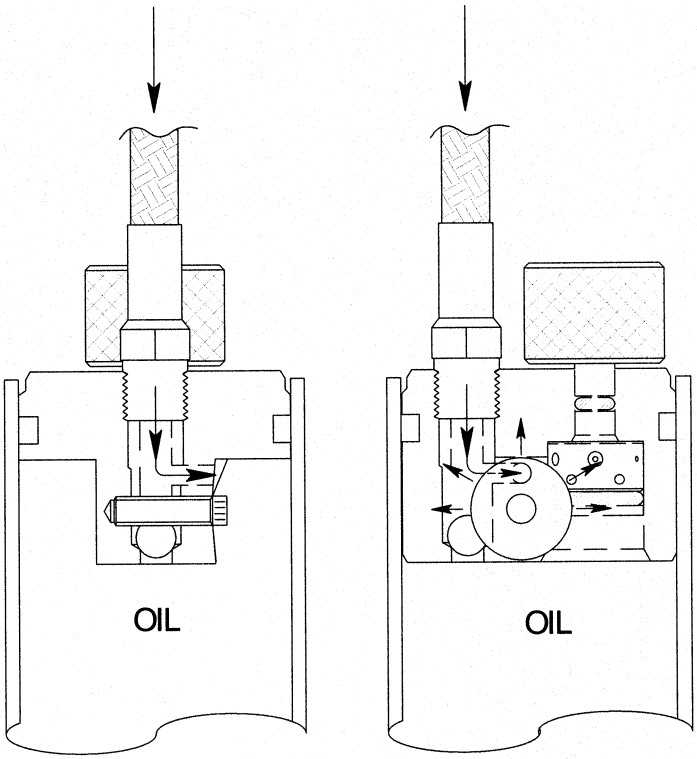

Figure 2

The 8100 compression adjuster is located in the remote reservoir assembly. The remote reservoir serves as an extension of the shock absorbers vital elements: oil and nitrogen. The remote reservoir theory allows for the use of increased volumes of oil and nitrogen while allowing for smaller shock packaging. Increased nitrogen volume is essential for consistent damping forces throughout a long race and extreme conditions.

In the compression mode of the shock absorber, fluid is forced into the remote reservoir in direct proportion to the area of the shaft entering the shock body. As fluid enters the reservoir, it must pass through the compression adjuster. Inside the compression adjuster is the CD drum. The CD drum has (6) settings, numbered (1-6), with number one setting (the largest hole) being full soft and number six (the smallest hole) being full firm. As fluid is forced through the CD drum (Figure 1), it is metered through one of the preassigned orifices in the drum; it then enters the reservoir body,moving the floating piston. The floating piston is designed to separate the fluid and nitrogen, eliminating any chance of aeration.

In the event of high speed shaft velocities, fluid passing through the hole in the CD drum could pack-up, causing an increase in damping forces, due to the fact that fluid can no longer pass through the hole. In this event, the fluid forces open the blow-off valve (Figure 2). The blow-off valve makes a more linear damping curve.

Note: The remote compression adjuster is a fine tuning device for the main valving located inside the shock absorber.

8660 Series Compression Adjuster Parts List

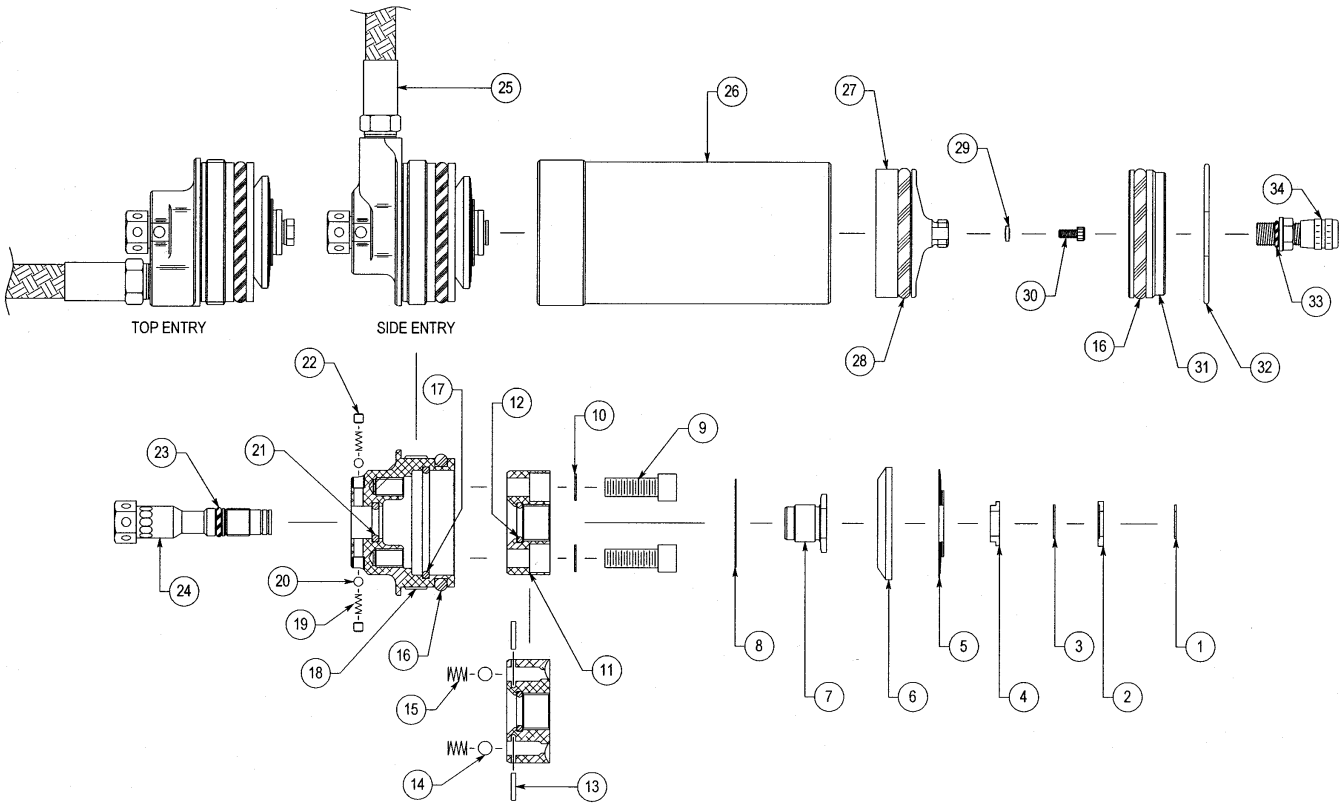

ITEM NO.	PART NO.	DESCRIPTION
		8660 Series Adjuster Option **Available in 4", 5", and 6" Body Lengths**
1	RR-12	Retaining Ring, .343 External
2	CA-92	Cage, CD Clasp .343 Diameter
3	RR-12	Retaining Ring, .343 External
4	CA-90	Cage, CD Top Hat .343 Diameter
5	VW-91	Washer, Valve, 1.475 x .010
	VW-88	Washer, Valve, 1.350 x .008
	VW-66	Washer, Valve, 1.200 x .006
	VW-44	Washer, Valve, 1.050 x .004
	VW-28	Washer, Valve, .900 x .008
	VW-30	Washer, Valve, .900 x .010
	VW-38	Washer, Valve, .900 x .020
6	CA-76CD	Cage, Compression Adjuster
7	SC-76INS	Screw, Piston Insert
8	VW-70	Washer, Valve, 1.200 x .010
9	SC-06	Screw, SHCS, 1/4" -20 x 3/4"
10	VW-01-C	Crush Washer, .25 ID, Copper
11	PI-76CD	Piston, Compression Adjuster
12	OR-2013-B	O-Ring, 2-013, Buna 70
13	DO-06	Dowel Pin, 1/16" x 3/8"
14	BA-187-ST	Ball, Steel - 3/16"

ITEM NO.	PART NO.	DESCRIPTION
15	SP-16	Spring, (1460)
16	OR-2222-B	O-Ring, 2-222, Buna 70
17	OR-2028-B	O-Ring, 2-028, Buna 70
18	HG-76____*	Housing, 8760, (Side Entry or Top Entry)
19	SP-14	Spring, (A109)
20	BA-125-ST	Ball, Steel - 1/8"
21	OR-2013-B	O-Ring, 2-013, Buna 70
22	SC-08	Screw, Socket Set, 8/32" x 1/8"
23	OR-2010-B	O-Ring, 2-010, Buna 70
24	SH-86CD	Shaft, CD High Speed
25	HO-87___*	Hose (4" - 36" in 1" increments)
26	RB-76___*	Reservoir Body, 8760, (4.00", 5.00" or 6.00")
27	PI-76	Piston, Floating 1.75 Diameter
28	OR-4222-B	Quad Ring, 4-222, Buna 70
29	SL-87	Seal, Dowty
30	SC-18	Screw, SHCS, 4 - 40 x 1/4"
31	CP-76	Cap, Reservoir Port O-Ring
32	RR-06	Wire Ring, .0625 Wire Diameter x 1.900
33	OR-2010-B	O-Ring, 2-010, Buna 70
34	IU-20-A	Air Valve, Port O-Ring, Aluminum
	IU-04	Valve Core, 2000 psi
	IU-06	Valve Cap, High Temperature

*** Incomplete Part Number**

8660 Series Compression Adjuster

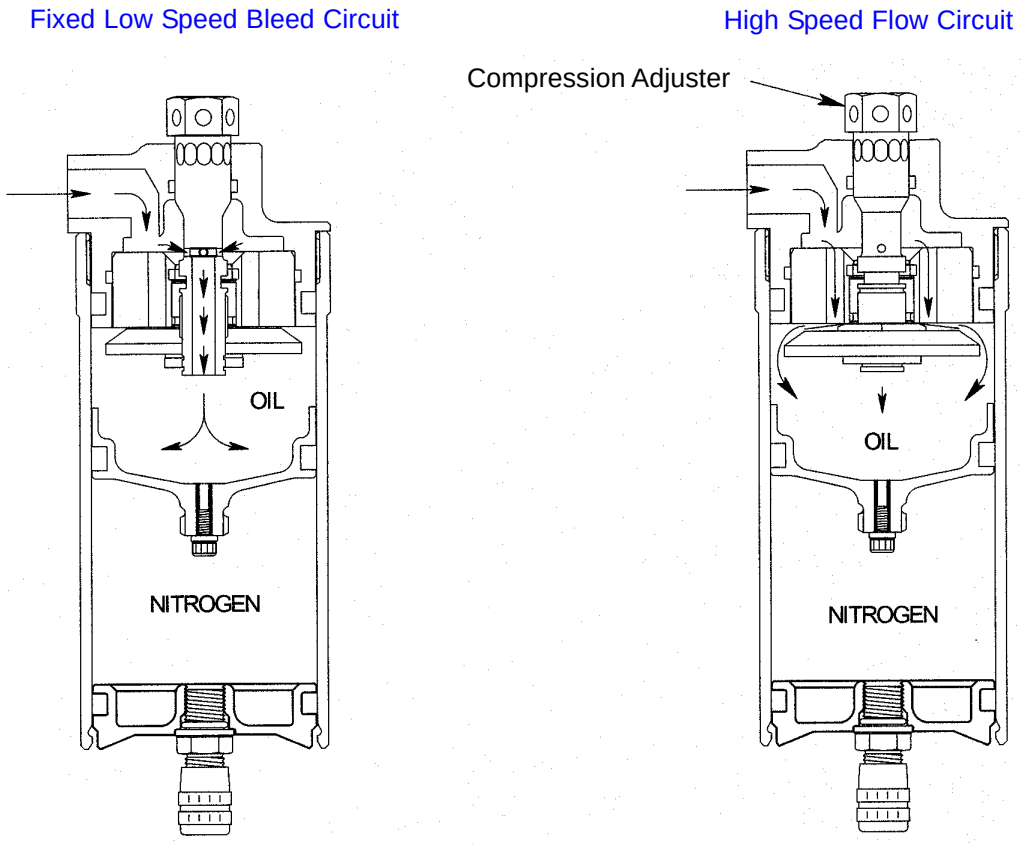

COMPRESSION ADJUSTMENT

In the state of low shaft velocities (i.e. corner entry, exit, and power down), oil is displaced within the damper in direct proportion to the volume of the shaft entering the body. The displaced fluid passes through the compression adjuster where it is metered through a fixed, low speed bleed orifice. Due to the small diameter of this orifice and the viscosity of the damper fluid, a pressure loss occurs across the orifice. This loss of pressure is a loss of energy in the fluid due to friction and the subsequent opposing damping force is generated.

As the shaft velocities increase, the same amount of fluid must pass through the low speed bleed orifice, but at a much higher rate. The viscosity of the fluid causes a greater resistance to flow at the orifice entrance which in turn produces a large internal force on the CD housing. The other major internal components, namely the piston and shim cage, are designed to handle this extra force by allowing the shims to “blow off” proportionally to the extra force generated, much like a coil spring compresses proportionally to the axial load applied. With this arrangement, the low speed bleed orifice still meters fluid during high speed shaft movements, but the extra forces generated are handled with the shims which have less resistance to flow at higher velocities. They are designed to virtually bypass the low speed orifice and form a new fluid circuit. The force at which this occurs can be varied by turning the compression adjuster in or out, which preloads the shims. Therefore, as the preload on the shims increases, the static force required for them to activate is increased as well. The name designation for the parts also clue one in to their purpose, with the low speed bleed orifice handling low velocity bleed flows and the piston/shim arrangement handling high velocity flows. This principle originated in the main shaft piston/shim arrangement and follows similar behavior.

NOTE: When making adjustments, use the **full soft** setting (adjuster wound all the way in against the reservoir body) as a starting point when counting the number of “clicks” to the desired setting. The full soft setting should correspond to a clicker number designation of **0**. This starting datum has been proven to be most reliable and repeatable when making compression adjustments. There are 22 +/- clicks of adjustment.

8760 Series Compression Adjuster Parts List

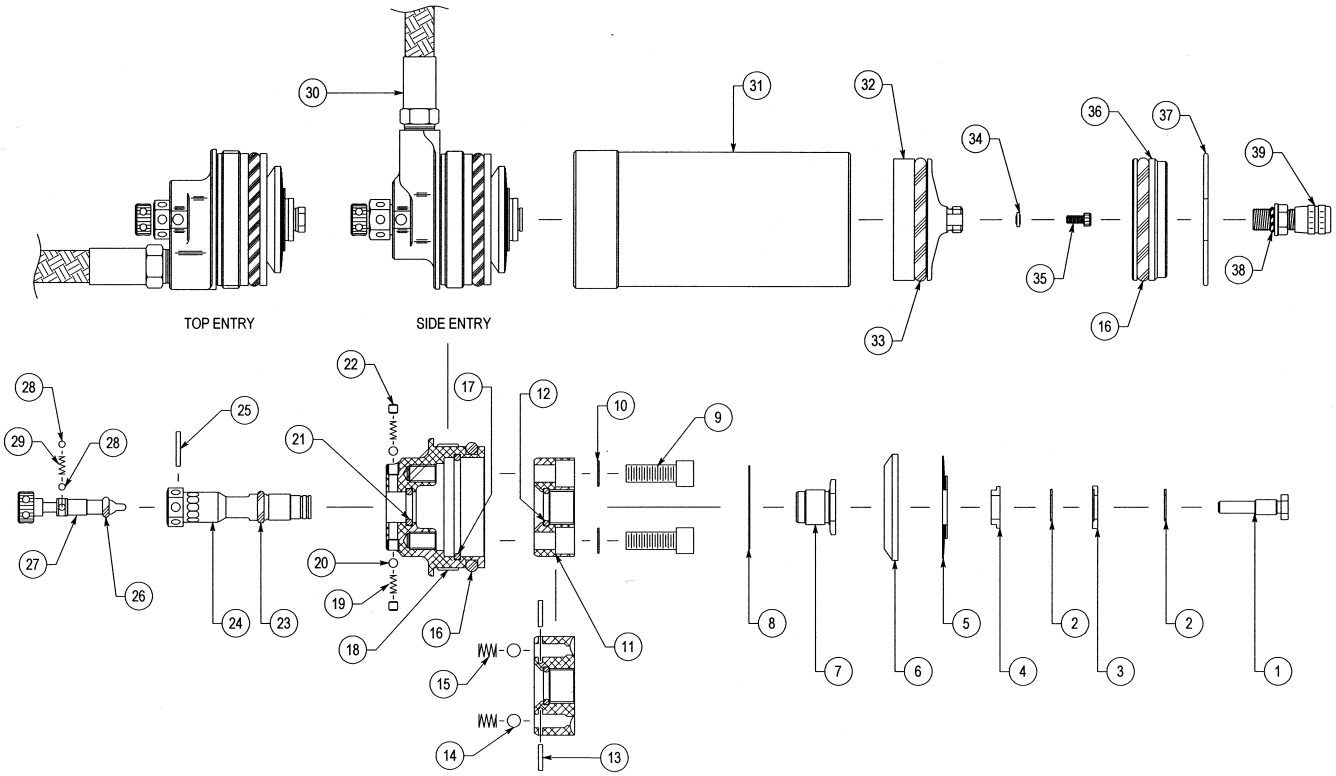

ITEM NO.	PART NO.	DESCRIPTION
		8760 Series Adjuster Option **Available in 4", 5", and 6" Body Lengths**
1	JT-76CDSH	Jet, High Speed Shaft
2	RR-12	Retaining Ring, .343 External
3	CA-92	Cage, CD Clasp .343 Diameter
4	CA-90	Cage, CD Top Hat .343 Diameter
5	VW-91	Washer, Valve, 1.475 x .010
	VW-88	Washer, Valve, 1.350 x .008
	VW-66	Washer, Valve, 1.200 x .006
	VW-44	Washer, Valve, 1.050 x .004
	VW-28	Washer, Valve, .900 x .008
	VW-30	Washer, Valve, .900 x .010
	VW-38	Washer, Valve, .900 x .020
6	CA-76CD	Cage, Compression Adjuster
7	SC-76INS	Screw, Piston Insert
8	VW-70	Washer, Valve, 1.200 x .010
9	SC-06	Screw, SHCS, 1/4" -20 x 3/4"
10	VW-01-C	Crush Washer, .25 ID, Copper
11	PI-76CD	Piston, Compression Adjuster
12	OR-2013-B	O-Ring, 2-013, Buna 70
13	DO-06	Dowel Pin, 1/16" x 3/8"
14	BA-187-ST	Ball, Steel - 3/16"
15	SP-16	Spring, (1460)
16	OR-2222-B	O-Ring, 2-222, Buna 70
17	OR-2028-B	O-Ring, 2-028, Buna 70

ITEM NO.	PART NO.	DESCRIPTION
18	HG-76____*	Housing, 8760, (Side Entry or Top Entry)
19	SP-14	Spring, (A109)
20	BA-125-ST	Ball, Steel - 1/8"
21	OR-2013-B	O-Ring, 2-013, Buna 70
22	SC-08	Screw, Socket Set, 8/32" x 1/8"
23	OR-2010-B	O-Ring, 2-010, Buna 70
24	SH-76CD12	Shaft, CD High Speed 12pt
25	DO-18	Roll Pin, 1/16" x 1/2"
26	OR-2004-B	O-Ring, 2-004, Buna 70
27	SC-76CDLS	Screw, CD Low Speed
28	BA-093-ST	Ball, Steel - 3/32"
29	SP-12	Spring, (3648)
30	HO-87__*	Hose (4" - 36", in 1" increments)
31	RB-76__*	Reservoir Body, 8760, (4.00", 5.00", or 6.00")
32	PI-76	Piston, Floating 1.75 Diameter
33	OR-4222-B	Quad Ring, 4-222, Buna 70
34	SL-87	Seal, Dowty
35	SC-18	Screw, SHCS, 4 - 40 x 1/4"
36	CP-76	Cap, Reservoir Port O-Ring
37	RR-06	Wire Ring, .0625 Wire Diameter x 1.900
38	OR-2010-B	O-Ring, 2-010, Buna 70
39	IU-20-A	Air Valve, Port O-Ring, Aluminum
	IU-04	Valve Core, 2000 psi
	IU-06	Valve Cap, High Temperature

*** Incomplete Part Number**

8760 Series Compression Adjuster

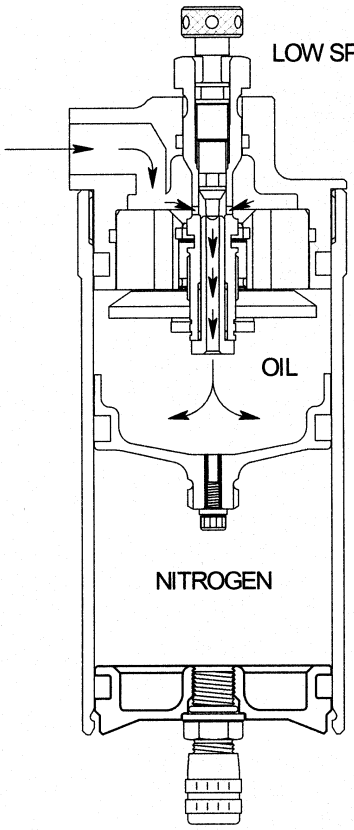

LOW SPEED COMPRESSION ADJUSTMENT

In the state of slow shaft movement (i.e., corner entry, exit, and power down), oil is displaced into the reservoir in direct proportion to the area of the shaft entering the shock body. The oil passes through the compression adjuster where it is metered through an adjustable needle and jet assembly. By shutting down the flow of oil, the oil is restricted, causing a stiffer feel in low speed circumstances. The low speed adjuster works in conjunction with the high speed adjuster to delay the high speed circuit.

The low speed compression bleed bypass adjuster has approximately 30 “clicks” of adjustment. Turning the adjuster knob clockwise increases the low speed damping.

HIGH SPEED
COMPRESSION ADJUSTER

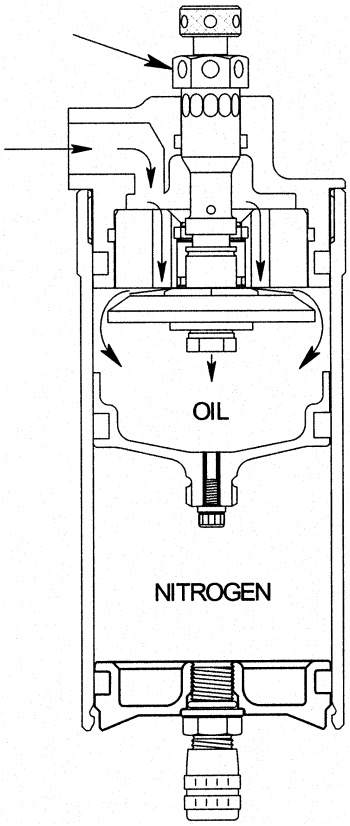

HIGH SPEED COMPRESSION ADJUSTMENT

In fast shaft movement (i.e. bumps, track inconsistencies, etc.), oil is displaced into the reservoir, as in the low speed state, but at a much faster velocity. The oil is forced to bypass the low speed needle and jet due to the fact that the small orifice in the jet causes the oil to hydraulic. In turn, the oil is forced through another piston in which it’s orifices are covered by another shim stack. This shim stack is preloaded with force from the CD cage and preload shims. By turning the high speed adjuster clockwise (stiffer), you are preloading the CD cage and shims, making it tougher for the oil to flex the shims.

The operation of the high speed adjuster assembly effect is timed by the adjustment of the low speed needle and shaft velocity. (i.e., if the low speed needle is full soft, at high speed a larger volume of oil will initially pass through the low speed jet slightly delaying the operation of the high speed bypass mode.

Turning the black hex adjuster clockwise increases the high speed damping. There are 24 +/- clicks of high speed adjustment counting from full soft.

NOTE: When making adjustments on the high speed adjuster, start at the full soft setting (adjuster wound all the way in against the reservoir body) counting the clicks toward full firm. When adjusting low speed, start at the full firm setting (adjuster wound all the way in against high speed adjuster) counting the clicks toward full soft. This makes your settings more precise and less confusing for your records.

Rebound Adjusters

8760 Needle and Jet

The 8760 jet and needle combination have been designed to give the user a broader and more linear range of adjustment for bleed past the piston on rebound.

The 8760 jet utilizes a spring loaded poppet valve to check the flow. This gives a better seal against the flow and a quicker response time as the shaft changes direction.

This needle has a curved parabolic tip, which gives a very fine, linear adjustment in damping across the entire range provided by the jet. It can be thought of as a combination of the 10°, 5°, and 3° needles.

The 8760 needle and jet will fit any of our adjustable shafts, but they must be used together and cannot be interchanged with older style needles and jets.

When installing any jet, apply a tiny drop of blue Loctite™ to the threads and torque to 120 in•lbs.

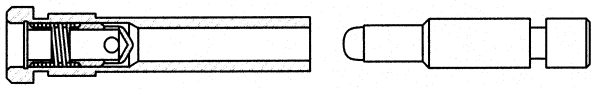

The rebound adjuster on the 8100 and 8700 Series shock absorber is located in the eyelet at the base of the main shaft. Inside the window is an adjustment screw, which serves as the control point for rebound adjustments. (Figure 1)

The 8760 rebound adjuster (red knob) is located at the base of the eyelet. (Figure 2)

During the rebound (extension) stage of the shock movement, fluid is forced through two ports in the main shaft. Inside the main shaft is a needle and jet assembly, which adjusts the amount of fluid passing through the jet. By turning in the rebound adjuster (clockwise), the needle is forced up into the jet, restricting the fluid, causing firmer rebound damping forces. In reverse, by turning the adjuster out (counter clockwise), more oil is allowed to pass through the jet causing lighter rebound damping forces. The rebound adjustment assembly, is a timed control for the shims located on the main piston to work.

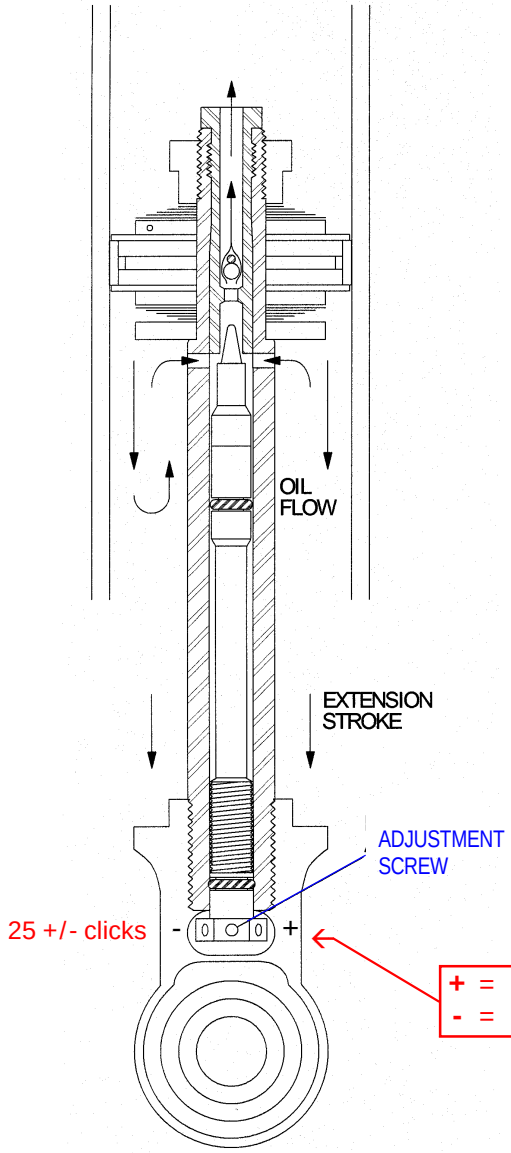

Figure 1

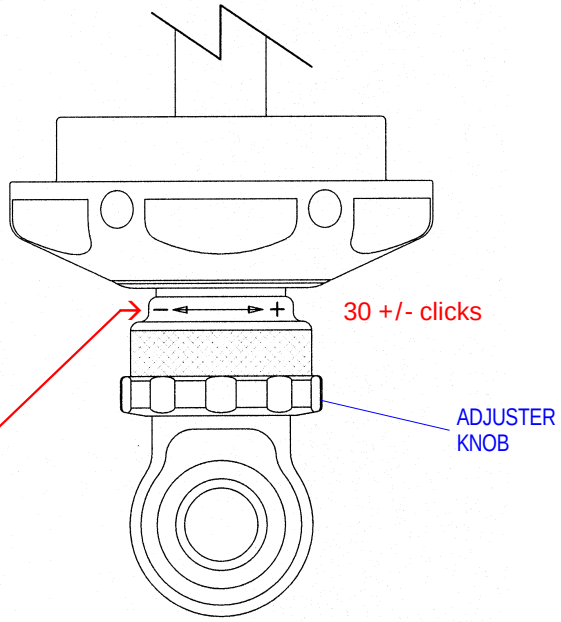

Figure 2

+ = More Damping
- = Less Damping

Disassembly / Assembly Instructions

Disassembly Instructions

1. Back the rebound adjuster to full soft and **depressurize** the remote reservoir.
2. Clamp the body cap eyelet in a vise with the shaft pointing up.
3. Unscrew the shaft bearing assembly and remove the shaft assembly.
4. Drain the oil. (Please dispose of properly)
5. Push the reservoir end cap up into the reservoir body.
6. Using a scribe, pry the wire retaining ring out of the reservoir body and remove the reservoir end cap.
7. Looking into the reservoir, you will see a threaded hole in the reservoir floating piston. Using an 8-32 (8100) or 3-8 x 24 (8760) internally threaded rod, remove the floating piston by holding onto the reservoir body and pulling on the threaded rod. Drain the oil from the reservoir
8. Use solvent to clean all parts, then dry and inspect them. ***NOTE:*** Brake cleaner use is discouraged due to the possible damaging effects on seals and wipers.
9. Inspect and replace the o-rings as needed.
10. If needed, revalving is done at this point. Clamp the shaft eyelet in the vise with the piston pointing up. Remove the 1/2" ring nut from the top of the shaft assembly to access valving or to change the seals in the shaft bearing.

Assembly Instructions

1. Reassemble the shaft and piston assembly. Before installing the ring nut, there should be no more then .150 shaft to bottom threads exposed to avoid damaging the nut or shaft threads. Be sure to add sufficient constants to be able to properly torque the ring nut to 25 ft•lbs (300 in•lbs). [Use constants on CD side for linear pistons. Digressive and VDP can be varied.]
2. If the jet was removed, add a tiny drop of blue Loctite™ to its threads and torque to 120 in•lbs (maximum).
3. Torque the jam nut to 40 ft•lbs (480 in•lbs).
4. With the shock returned to the vise, fill the remote reservoir half full with oil.
5. Hold the remote reservoir above the shock body and look into shock body. When the oil level is above the fitting port, fill the reservoir to the top with oil. [8100 set CD on full hard, #6; 8660 set CD on full soft, turn knob counter clockwise until it stops against CD body; 8760 high speed CD adjuster (black hex) set on full soft, turn counter clockwise until it stops against CD body, low speed CD adjuster (silver knob) set on full hard, turn knob clockwise until it stops against high speed hex.]
6. Before the oil lowers, insert the floating piston and 8100 piston band or 8700/8760 quad ring* into the reservoir body. *Make sure the quad ring is not twisted.
7. Hold the remote reservoir below the level of the shock with the hose pointing up allowing any trapped air to flow up into the shock body. Using the handle of a mallet, push the floating piston up into the reservoir body until bottomed. [8100 CD set on full soft, #1; 8660 CD set on full soft, turn the knob counter-clockwise until it stops; 8760 high speed CD adjuster (black hex) set on full soft, turn counter-clockwise until it stops, low speed adjuster (silver knob) set on full soft, turn the knob counter-clockwise until it stops.]
8. Slowly pull the reservoir floating piston back, then push in 2 to 3 inches.
9. Repeat step #7 & #8 until there are no air bubbles seen coming from the reservoir. (When no air bubbles are seen go directly from step #7 to step #10).
10. Replace the reservoir end cap and snap ring.
11. Pressurize the remote reservoir to reposition the floating piston (approx. 150 psi).
12. Fill the shock body with oil to the bottom of the threads (1/2" from the top of the body).
13. Insert the piston/shaft assembly with the teflon piston band into the shock body, pushing the piston just below the surface of the oil, until the 2 shaft bleed hole ports are covered.
14. It is very important to remove as much air as possible from the piston assembly. To do this, start by moving the shaft up slowly and pushing down a few times using a 1" - 2 " stroke, being sure to keep the two ports in the shaft below the surface of the oil, or air will be sucked back into the piston assembly. Lightly tap the eyelet a few times with a mallet to assure that all the air is released from the piston. ***NOTE:*** *this step is very important; take your time, repeat as needed.*
15. Slowly pull up on the shaft assembly until the two ports are just below the surface of the oil. Top off with oil to fill the shock body.
16. Slide the shaft bearing down without moving the shaft until the o-ring contacts the body. Depressurize the remote reservoir, tighten the shaft bearing. Do not overtighten the shaft bearing.
17. Pressurize the shock to approximately 200 psi. Please call if you have any questions on specific pressures.

NOTES

1) IMPORTANT: Reservoir floating piston must be repositioned before the shaft is inserted into the shock body (refer to step #11).
2) Penske Suspension Fluid (Silkolene Pro RSF 5 wt.) is recommended. Use of alternate fluids may have an adverse effect the damper's internal sealing components. (i.e., o-rings)

Suggested Maintenance

PRE RACE ..... Inspect for oil leakage. Check the nitrogen pressure.

EVERY 30 HOURS OF TRACK TIME OR YEARLY ..... Change oil. Replace the shaft seal o-ring, wiper, shaft bearing o-ring, reservoir cap o-ring and piston o-ring, floating piston quad ring, valve shims.

Trouble Shooting

LOSS OF NITROGEN PRESSURE ..... Valve core is not tight or needs replacing, o-ring on air valve needs replacing, reservoir cap o-ring needs replacing, leaking quad ring, or dowty seal.

OIL LEAK AROUND SHAFT ..... Shaft seal o-ring or wiper needs replacing. *Note: minimal oil seepage is normal.*

OIL LEAK AT RESERVOIR ..... Teflon tape seal on hose needs replacing, reservoir cap or CD housing o-ring needs replacing.

OIL LEAK BETWEEN SHAFT BEARING AND BODY ..... Shaft bearing o-ring needs replacing.

SHAFT WILL NOT FULLY EXTEND ..... Check for bent shaft, low nitrogen pressure. *Note: do not spray brake cleaner or solvent on the shaft wiper, it may cause it to swell and prevent proper movement.*

General Valving Characteristics

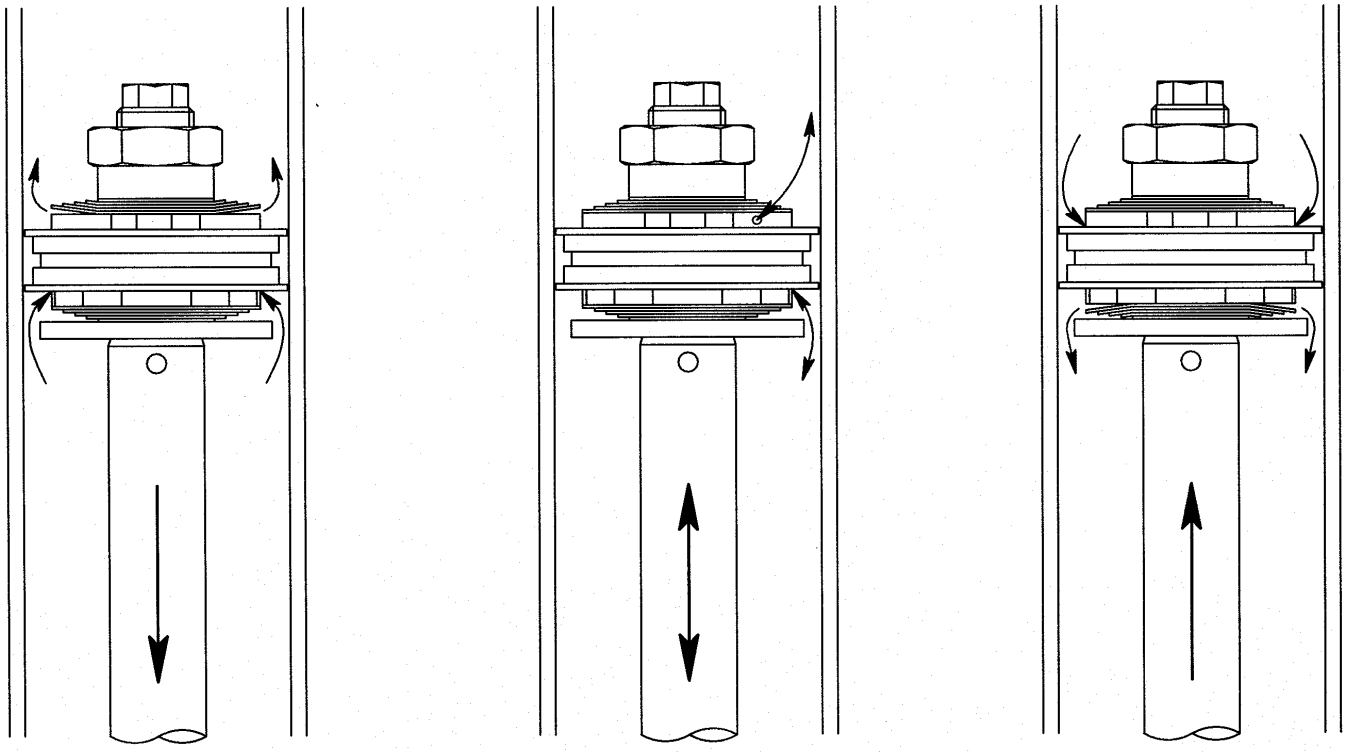

High Speed Rebound

Low Speed* Compression and Rebound

High Speed Compression

The damping characteristics of your shock are determined by the compression and rebound valve stacks located on the main piston.

The valve stacks are made up of a series of high quality shims, which are made to flex under the force of oil flowing through the piston ports and then return to their original state.

The thickness of the individual shims determines the amount of damping force the shock will produce. By changing the thickness of the individual shims, damping forces will be altered. For example, if you are running an “A” compression valving, where all the shims in the stack are .006 thick and you replace them with a “B” compression valving, which consists of all .008 thick shims, the compression damping will increase.

* When the shaft is moving very slowly oil passes through the bleed hole, if there is one, before it passes to the shims.

A Guide To Damper Tuning

The ultimate purpose of a shock is to work together with the spring to keep the tire on the track. In compression (bump) to help control the movement of the wheel and in rebound to help absorb the stored energy of the compressed spring.

Breaking down the shaft speeds to chassis movement can be done from the data taken from on board data acquisition and/or actual test sessions.

Where we find the biggest advantages with low speed adjusters is looking at the chassis in the plane of the four wheels in relation to chassis movement in roll and pitch and how quickly weight is transferred to each corner in order to load the tire sooner or later, depending on track conditions.

Usually in rain or low grip situations allowing more bleed or less low speed damping is desirable to delay tire loading upon initial roll.

In dry high grip conditions adding damping or restricting bleed will load the tire sooner upon initial roll increasing platform stability.

In pitch situations on smooth surfaces under braking, increasing low speed damping or restricting bleed will help load the tires for entry or mid corner. If the tire begins bouncing under braking usually an increase in high speed compression will calm this down.

If the chassis feels like it is moving around too much relative to the track, increasing low speed damping or restricting bleed will overall firm up the chassis and give it a crisp feel or a better sense of feel in the car. This is why most drivers like this adjustment; as increasing low speed compression seems to give the driver better or quicker feedback from the chassis, resulting in a higher confidence in the car.

A car with too much low speed damping will usually lack grip in change of directions, cannot put power down in slower corners (wheel spin) and lack overall grip after initial turn in.

If traction is a problem coming off slow corners, reducing low speed damping or adding more bleed will help weight transfer at the rear thus increasing traction.

We like to look at high speed adjustments as individual movements at any of the four corners, caused by an input from the circuit or an exaggerated action by the driver. This adjustment is less forgiving than low speed, because of its large range of adjustment which can help or hurt the balance of the car. It is straight forward on how to adjust from simple driver's inputs, in regards to if the car feels too soft or stiff in the bumpier sections of the circuit.

One of the most important things to know about these adjusters is their relative position to one another. If for instance you have the low speed set at 25 to 30 clicks (soft), the range of high speed adjustment will be lessened. Or in the opposite direction, if the high speed is set at 0 to 1 (off soft), the low speed adjustment range will be lessened.

Also, when making a big adjustment in high or low speed, the change will affect the other in a small percentage. As an example, the high speed is set at (+4) and the low speed at (-6). Now you want to set the low speed to (-2), this will also increase a percentage of the high speed force figure. By dropping the high speed from (+4) to (+3) would compensate for this low speed change so the overall "damper curve" would remain intact.
The more experience you have with these the easier it will become to recognize what changes can occur in relation to different valvings. The tendency of these circuits to "cross talk" is greatly reduced in our new digressive CD piston (part # AS-76DIGCDUP).

The rebound adjuster consists of a needle metering flow across a hole. This metered flow bypasses the main piston/shim assembly until flow is choked off. The shims then modulate the flow.

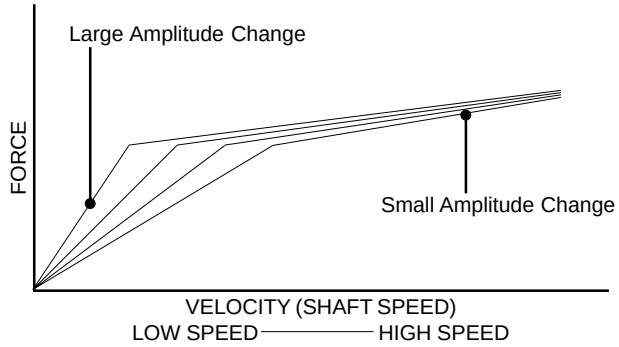

LOW SPEED ADJUSTMENT EXAMPLE

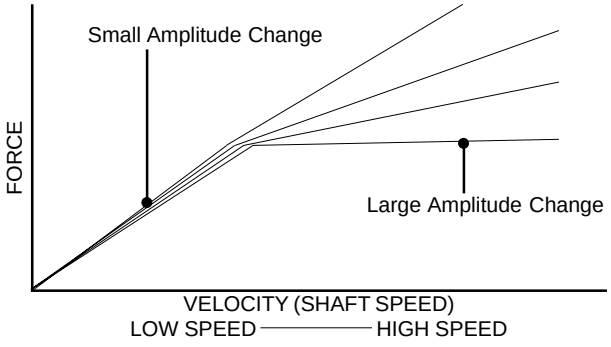

HIGH SPEED ADJUSTMENT EXAMPLE

A Guide To Damper Tuning

The range of adjustments will have a relation to high or low shaft velocity depending on what main piston is being used:

1) Linear Piston 1° - adjustment through range

2) Linear Piston 2° - greater change in low speed adjustment

3) Velocity Dependent Piston - adjustment through range with greater change in low speed

4) Digressive Piston - range primarily in low speed

Also depending on valving, there will be an affect on adjustment range. The softer the valving (A - B), the less force range it will have. This is due to a lower pressure required to blow the valves on the main piston. Obviously the heavier the valving (C - E), the more effective the bleed becomes. On digressive pistons, pre-load also affects the range of adjustment.

Rebound adjustments are usually indicated by the driver asking for more stability. By increasing low speed damping, stability will be enhanced; decreasing damping will allow more movement in the car, but will result in a little better tire wear.

Also, the amount of rebound can have a great influence on weight transfer. Less front rebound allows weight transfer to the rear under acceleration. Less rebound in the rear allows for a greater amount of weight transfer to the front under braking and turn in.

When a car is over damped in rebound it can pack down in a series of bumps and a driver will recognize this as too stiff and usually will think it is compression damping. Too much rebound can cause lack of grip on cornering.

When making a large spring change keep in mind where the rebound adjuster is and do you have enough range to compensate. Sometimes a spring change will bring a better balance to the damping values after the spring change. If the spring/shock combination was balanced, the rule of thumb is a stiffer spring requires lower compression and higher rebound. A softer spring requires higher compression and lower rebound.

Basic Start-up Procedure

The following setup procedures are basic recommendations for reaching an initial starting point using double adjustable Penske Racing Shocks. This procedure is ideal for use on an open test schedule. A race weekend may not allow enough time. Start by making the compression adjustments as described below, until it feels right, then move to the rebound adjustments.

COMPRESSION

The idea is to set the compression damping forces to suit the bumps in critical areas, such as corners, corner exits and braking zones.

Increasing or lowering cannister pressure (range 150 to 300 psi) can have an influence on support under braking, acceleration, and tire loading on turn in, and on mid-corner grip.

Step 1 - Set the rebound adjuster at full soft.

Step 2 - Starting with the compression setting at full soft, drive a lap then return to increase the bump settings. Continue this process of adding bump control to minimize the upsets until the car becomes harsh, loses tire compliance and traction. At this point you know that you have gone too far on the compression settings; back off one click.

REBOUND

The idea is to tighten up the car, stabilize the platform and eliminate the floating "Cadillac feeling". This will also reduce the rate of body roll.

Step 1 - With the rebound setting at full soft, add 5 flats (8100) or clicks (8760) of rebound adjustment at a time, then return to continue the process until the car becomes "skittish" or the rear wheels hop under braking. At this point you know you have gone too far on the rebound settings, back off one flat at a time for final balance.

Once again, this is a basic procedure for finding your initial setup for a given track. If you find that you are at the end of your adjustment range and feel that the car is feeling better, you will need to revalve the shocks to allow for further adjustment in the given direction.

Valving

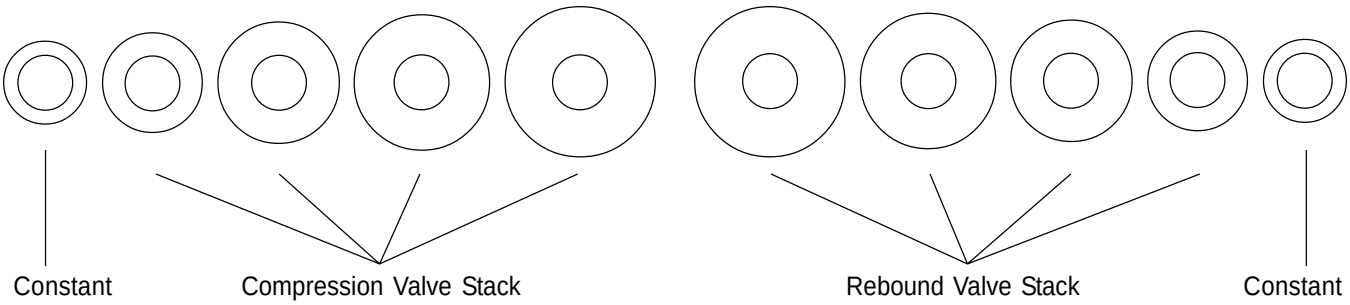

When refering to shock valving, (example: A/B), (A) refers to the compression valve stack and (B) refers to the rebound valve stack.

Valve Stacks

Standard Digressive Valve Stack

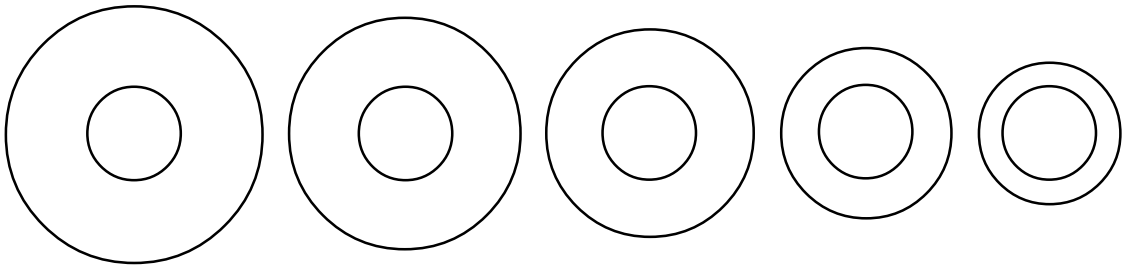

Part #		1.350 O.D.	1.200 O.D.	1.050 O.D.	.900 O.D.	.750 X .020
VS-AA	**AA**	.004	.004	.004	.004	Constant
VS-AAP	**AA+**	.004	.004	.006	.006	Constant
VS-AM	A-	.006	.006	.004	.004	Constant
VS-A	**A**	.006	.006	.006	.006	Constant
VS-AP	**A+**	.006	.006	.008	.008	Constant
VS-BM	B-	.008	.008	.006	.006	Constant
VS-B	**B**	.008	.008	.008	.008	Constant
VS-BP	**B+**	.008	.008	.010	.010	Constant
VS-CM	C-	.010	.010	.008	.008	Constant
VS-C	**C**	.010	.010	.010	.010	Constant
VS-CP	**C+**	.010	.010	.012	.012	Constant
VS-DM	D-	.012	.012	.010	.010	Constant
VS-D	**D**	.012	.012	.012	.012	Constant
VS-DP	**D+**	.012	.012	.015	.015	Constant
VS-EM	E-	.015	.015	.012	.012	Constant
VS-E	**E**	.015	.015	.015	.015	Constant
VS-EP	**E+**	.015	.015	.020	.020	Constant
VS-FM	F-	.020	.020	.015	.015	Constant
VS-F	**F**	.020	.020	.020	.020	Constant

VDP and Digressive Valving Information Options

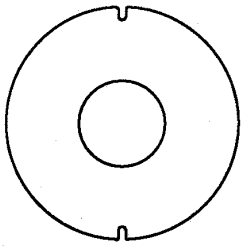

2 Notch
1.350 O.D.

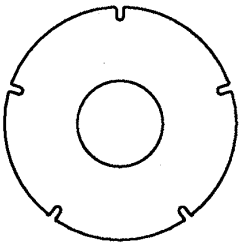

5 Notch
1.350 O.D.

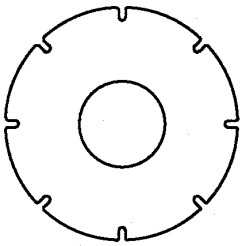

8 Notch
1.350 O.D.

	Part #		Part #		Part#
.004	**VW-2NX.004**	.004	**VW-5NX.004**	.004	**VW-8NX.004**
.006	**VW-2NX.006**	.006	**VW-5NX.006**	.006	**VW-8NX.006**
.008	**VW-2NX.008**	.008	**VW-5NX.008**	.008	**VW-8NX.008**

Flow Rate Through Slotted Shims

Shim Thickness	Number of Notches	Relative Flow Rate	Equivalent Bleed Hole Ø (1) Hole
0.004	2	0.48	0.022
0.004	5	1.20	0.035
0.004	8	1.93	0.044
0.006	2	0.64	0.025
0.006	5	1.61	0.040
0.006	8	2.57	0.051
0.008	2	0.86	0.029
0.008	5	2.14	0.046
0.008	8	3.42	0.059

These flow rate values are dimensionless and have no real meaning by themselves. They are simply used to cross-reference the amount of flow between different bleed hole or slot combinations. For example, four Ø.010” holes would have the same flow rate as one Ø.020” hole (with a flow rate of 0.40). The flow rates can also be added, so a piston with three Ø.015” and three Ø.020” holes would have a total flow rate value of 0.68 + 1.20 = 1.88 which would be the same as three Ø.025” holes.

VDP 55mm Linear Base Shim

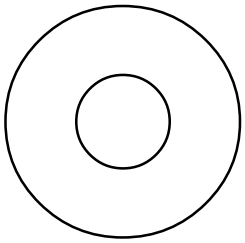

1.235 O.D.

	Part #
.004	**VS-37**
.006	**VS-39**
.008	**VS-41**
.010	**VS-43**
.012	**VS-45**
.015	**VS-47**

Preload Shim Spacers

	Part#
.004 x .750	**VW-23**
.006 x .750	**VW-25**
.008 x .750	**VW-27**
.010 x .750	**VW-29**
.012 x .750	**VW-31**
.015 x .750	**VW-33**
.020 x .750	**VW-00**

Flow Rate Through Multiple Bleed Holes

Hole Diameter	1 Hole	2 Holes	3 Holes	4 Holes	5 Holes	6 Holes	7 Holes	8 Holes	9 Holes
0.010	0.10	0.20	0.30	0.40	0.50	0.60	0.70	0.80	0.90
0.012	0.14	0.29	0.43	0.58	0.72	0.86	1.01	1.15	1.30
0.015	0.23	0.45	0.68	0.90	1.13	1.35	1.58	1.80	2.03
0.018	0.32	0.65	0.97	1.30	1.62	1.94	2.27	2.59	2.92
0.020	0.40	0.80	1.20	1.60	2.00	2.40	2.80	3.20	3.60
0.022	0.48	0.97	1.45	1.94	2.42	2.90	3.39	3.87	4.36
0.024	0.58	1.15	1.73	2.30	2.88	3.46	4.03	4.61	5.18
0.025	0.63	1.25	1.88	2.50	3.13	3.75	4.38	5.00	5.63
0.026	0.68	1.35	2.03	2.70	3.38	4.06	4.73	5.41	6.08
0.028	0.78	1.57	2.35	3.14	3.92	4.70	5.49	6.27	7.06
0.030	0.90	1.80	2.70	3.60	4.50	5.40	6.30	7.20	8.10
0.032	1.02	2.05	3.07	4.10	5.12	6.14	7.17	8.19	9.22
0.034	1.16	2.31	3.47	4.62	5.78	6.94	8.09	9.25	10.40
0.035	1.23	2.45	3.68	4.90	6.13	7.35	8.58	9.80	11.03
0.036	1.30	2.59	3.89	5.18	6.48	7.78	9.07	10.37	11.66
0.038	1.44	2.89	4.33	5.78	7.22	8.66	10.11	11.55	13.00
0.040	1.60	3.20	4.80	6.40	8.00	9.60	11.20	12.80	14.40
0.045	2.03	4.05	6.08	8.10	10.13	12.15	14.18	16.20	18.23
0.050	2.50	5.00	7.50	10.00	12.50	15.00	17.50	20.00	22.50
0.055	3.03	6.05	9.08	12.10	15.13	18.15	21.18	24.20	27.23
0.060	3.60	7.20	10.80	14.40	18.00	21.60	25.20	28.80	32.40
0.062	3.84	7.69	11.53	15.38	19.22	23.06	26.91	30.75	34.60
0.064	4.10	8.19	12.29	16.38	20.48	24.58	28.67	32.77	36.86
0.066	4.36	8.71	13.07	17.42	21.78	26.14	30.49	34.85	39.20
0.068	4.62	9.25	13.87	18.50	23.12	27.74	32.37	36.99	41.62
0.070	4.90	9.80	14.70	19.60	24.50	29.40	34.30	39.20	44.10
0.072	5.18	10.37	15.55	20.74	25.92	31.10	36.29	41.47	46.66

Piston Selection

Compression Face | Rebound Face

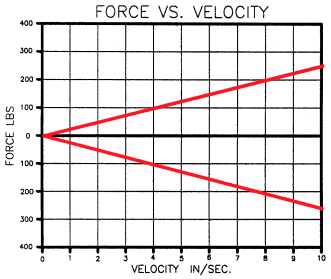

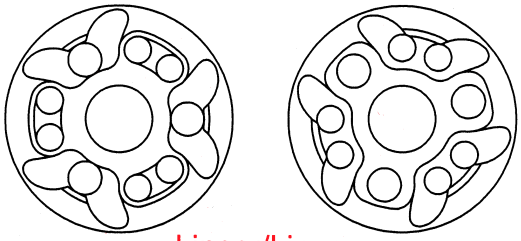

Linear/Linear

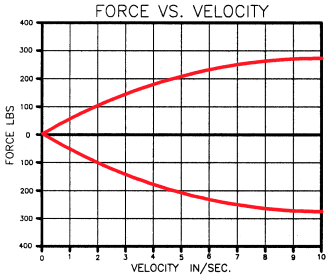

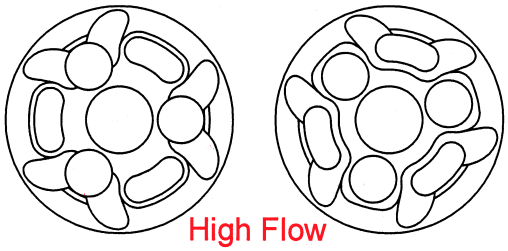

High Flow Linear/Linear

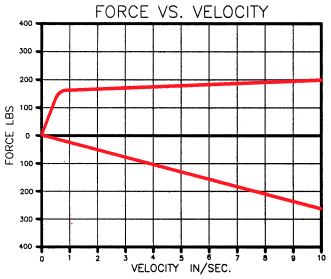

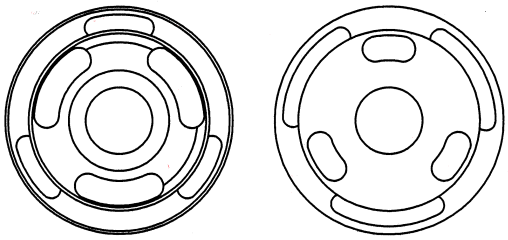

Digressive/Linear

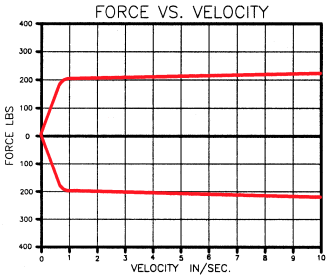

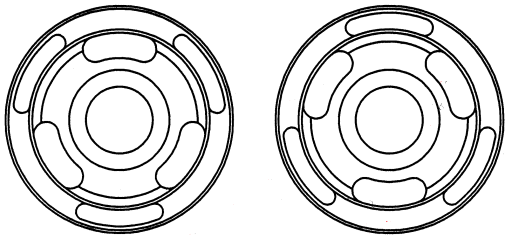

Digressive/Digressive

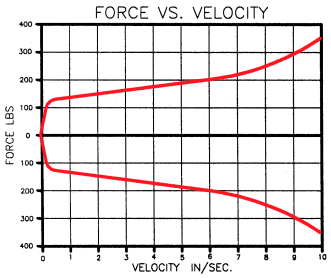

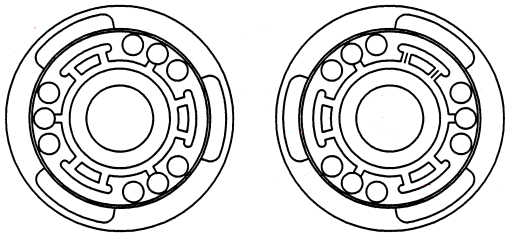

Velocity Dependent/Velocity Dependent

NEW

Digressive Blow Off

This two stage piston combines the low shaft speed characteristics of a linear piston with the blow off characteristic of a digressive piston at higher shaft speeds. Both parts of the curve are independently tunable.

COMPRESSION

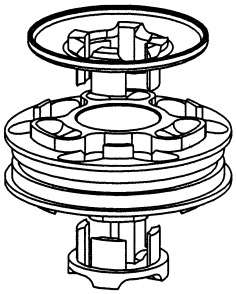

REBOUND

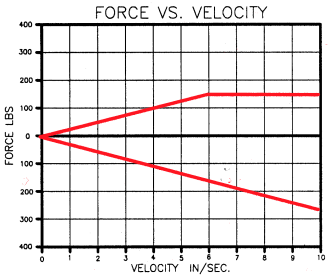

PART NO.	DESCRIPTION
PI-1100_*	Linear Piston, 1°/1°, (45mm or 55mm)
PI-1200_*	Linear Piston, 1°/2°, (45mm or 55mm)
PI-2100_*	Linear Piston, 2°/1°, (45mm or 55mm)
PI-2200_*	Linear Piston, 2°/2°, (45mm or 55mm)
PI-HF12005	High Flow Linear Piston, 1°/2°, 55mm
PI-HF14005	High Flow Linear Piston, 1°/4°, 55mm
PI-HF21005	High Flow Linear Piston, 2°/1°, 55mm
PI-HF22005	High Flow Linear Piston, 2°/2°, 55mm
PI-DL00_*	Digressive/Linear Piston, (45mm or 55mm)

PART NO.	DESCRIPTION
PI-DL005-1DG	Digressive/Linear Piston, 1°, 55mm
PI-DD00_*	Double Digressive Piston, (45mm or 55mm)
PI-VDL45	VDP / Linear Piston, 45mm
PI-VDPL55	VDP / Linear Piston, 55mm
PI-VDPL55-1DEG	VDP / Linear Piston, 1°, 55mm
PI-VDP5	Double VDP Piston, 55mm
PI-BLOWOFF-11	Blowoff Piston Complete, 1°/1°
PI-BLOWOFF-12	Blowoff Piston Complete, 1°/2°
PI-BLOWOFF-21	Blowoff Piston Complete, 2°/1°

* Incomplete Part Number

Linear Piston

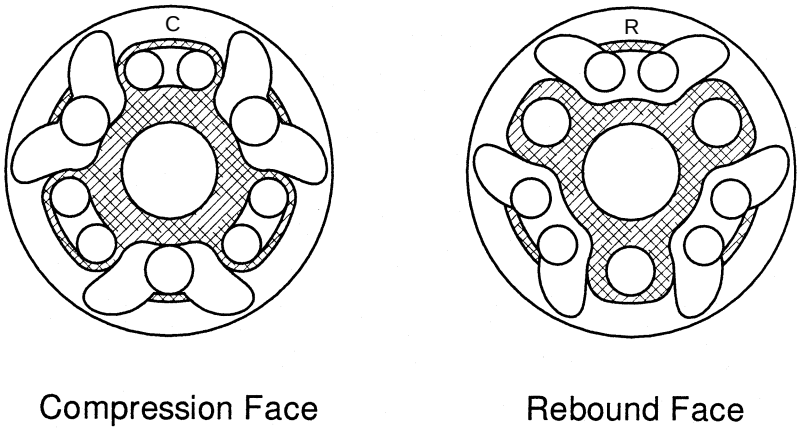

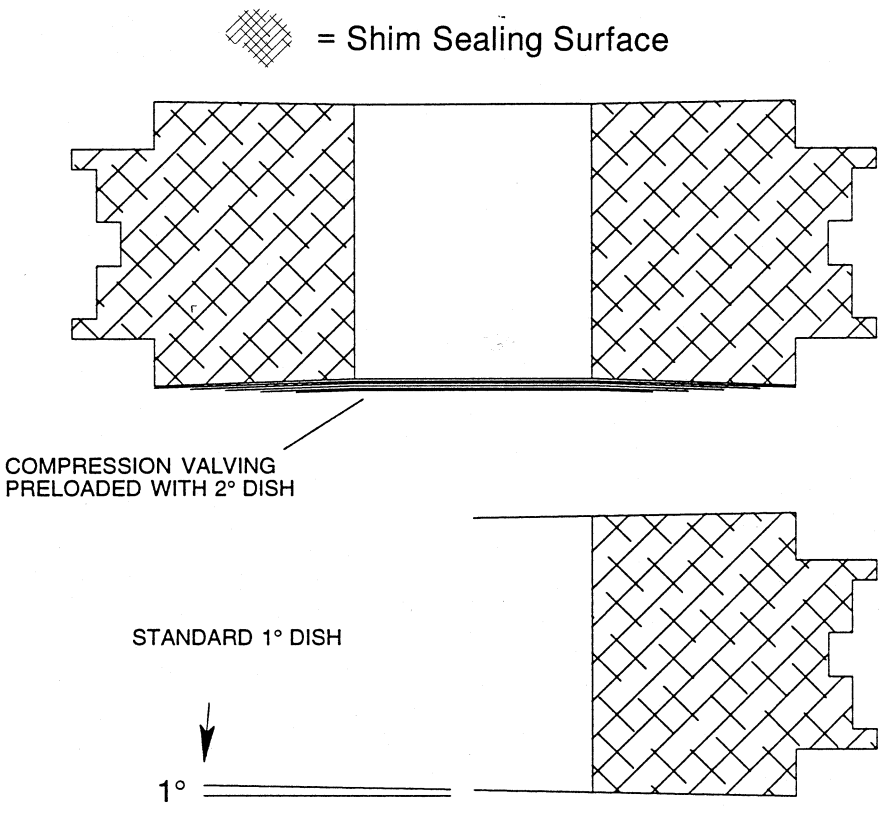

Each piston face has a dished surface, to preload the valve shims flat against the piston face. The standard dishing is 1° on both the compression and rebound sides of the piston. By increasing the compression side dishing to 2°, the shims become increasingly preloaded, causing a slight delay in opening during compression movement. The dishing causes the shims to "snap" open, in return giving the car a "snappier" feel as opposed to a smooth roll, once again this modification is for driver feel. If you have questions on piston dishing, call our technical staff for information and recommendations.

Digressive Piston

Digressive Piston

The “high flow” design incorporates larger ports on the face of the piston to increase the flow of oil throughout the shocks high speed action. When the shim stack opens, oil is “dumped” through the piston in large capacities. The increased flow of oil reduces the progressive damping characteristics of the linear side of the piston.

In addition to the larger ports, the face of the piston is designed to allow adjustments to the preload on the shim stack. Increased preload delays the opening of the shim stack, causing an increased damping force at low shaft speeds. When the shims crack open, oil is “dumped” at a high rate, reducing the progressive damping characteristics.

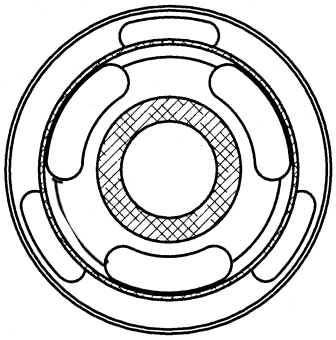

Digressive Face

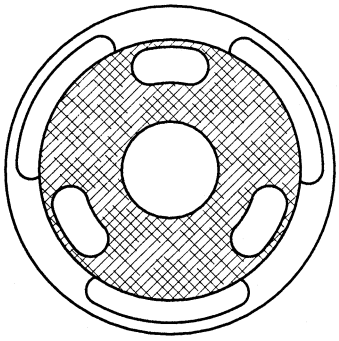

Linear Face

To visually explain piston preload, Figure 3, shows a high flow piston with zero preload on the shim stack. Figure 4, shows a high flow piston with an exaggerated amount of preload. The preload cups the shim stack, energizing the shims until the instant high shaft velocity snaps them open. The preload may be varied by adding or subtracting a series of shims under the main shim stack.

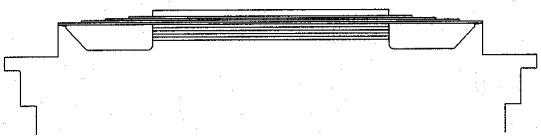

FIGURE 3
NON-PRELOADED
SHIM STACK

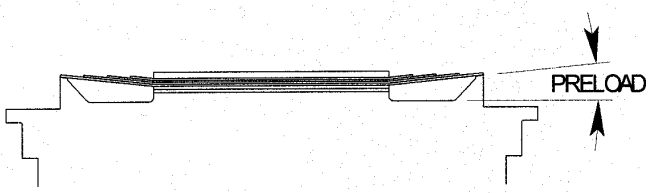

FIGURE 4
PRELOADED
SHIM STACK

The high flow piston design is offered in two variations. The double digressive piston is preload variable on both the compression and rebound sides. The digressive / linear piston is preload variable on the digressive side only, leaving the other side with linear characteristics. In most cases, the linear side of the piston would be rebound.

Digressive/Digressive

The double digressive piston has .050 (55mm), .030 (45mm) of available preload as shown in Figure 1. Stacking preload shims between the piston and the shim stack varies the amount of preload on the shim stack.
When referring to the amount of preload on a shim stack, you’re referring to the amount of preload on the piston face of the shim stack. For example; 55mm .010 preload = .050 (total available preload) minus .040 (the combined thickness of the preload stack).

Digressive/Linear

The linear side of the digressive/linear piston is treated as a standard linear piston, using a standard valve stack with (5) backup shims. Due to the higher flow, it is a rule of thumb to run (1) step stiffer on the linear side than what was used on a standard linear piston (example: A up to B).

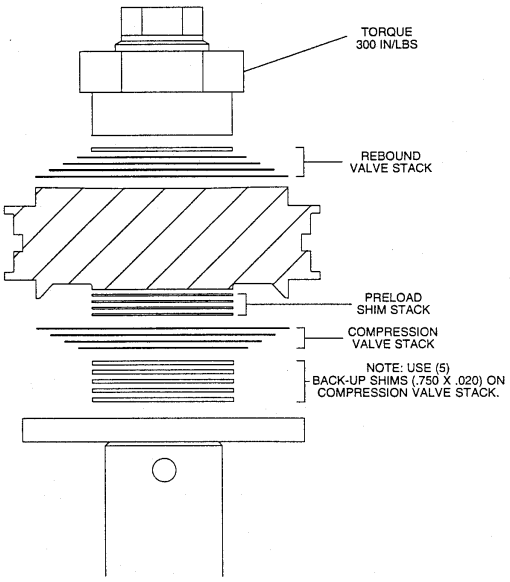

DIGRESSIVE/LINEAR
VALVING ILLUSTRATION

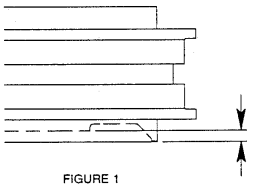

FIGURE 1

.050 (55mm)
.030 (45mm)

Velocity Dependent Piston (VDP)

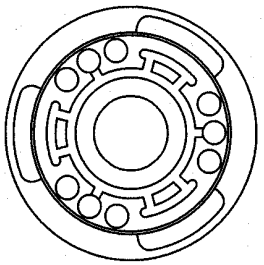

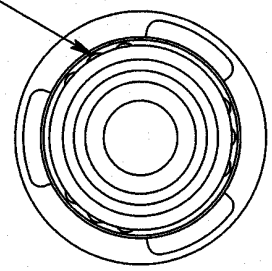

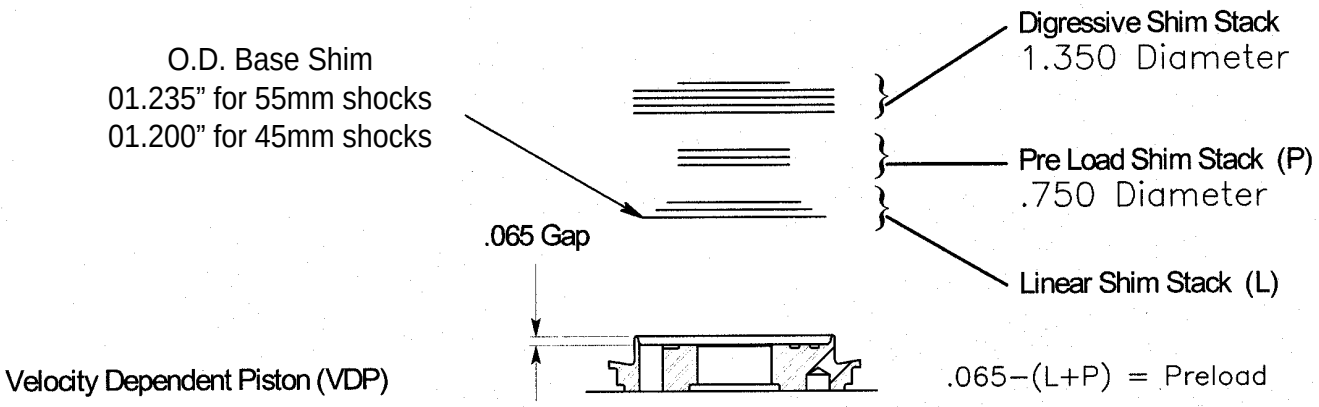

Compression

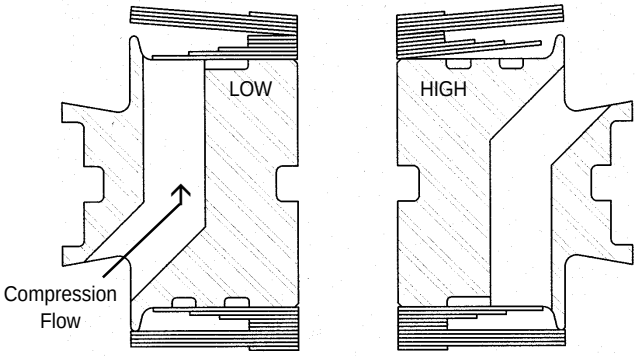

This graph illustrates the way in which the two different circuits operate on compression.

Rebound

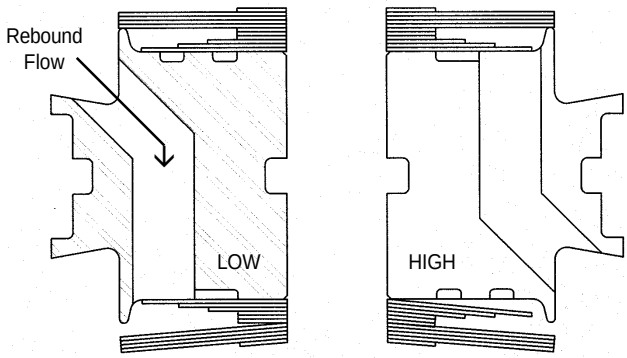

This graph illustrates the way in which the two different circuits operate on rebound side.

Low speed works the digressive stack and high speed works both.

Velocity Dependent Piston (VDP)

The Velocity Dependent Piston (VDP) has the unique ability to be valved to duplicate the curves of either linear or digressive pistons. Varying the inner, outer and preload stacks in conjunction with various bleed combinations can duplicate virtually any type of force value. Also the velocity where forces come in or out can be varied by altering the shims and preload/bleed combinations.
Note: On the VDP we have found that using all 1.350 shims for the digressive outer stack helps to seperate the high and low speed circuits in the piston resulting in more compliancy over bumps and curbs.

1. The Low Speed section is controlled by the amount of bleed, the outer valve stack configuration and the amount of preload to determine the nose profile.

2. The Digressive profile is set by the thickness of the outer stack. The amount of time that the curve stays digressive is also influenced by the stiffness of the inner stack and when it is initiated is also controlled by the preload.

3. The Linear values and profile are set by the thickness of the inner stack.

4. The values and time of the progressive profile are determined by the orifice holes and the inner stack.

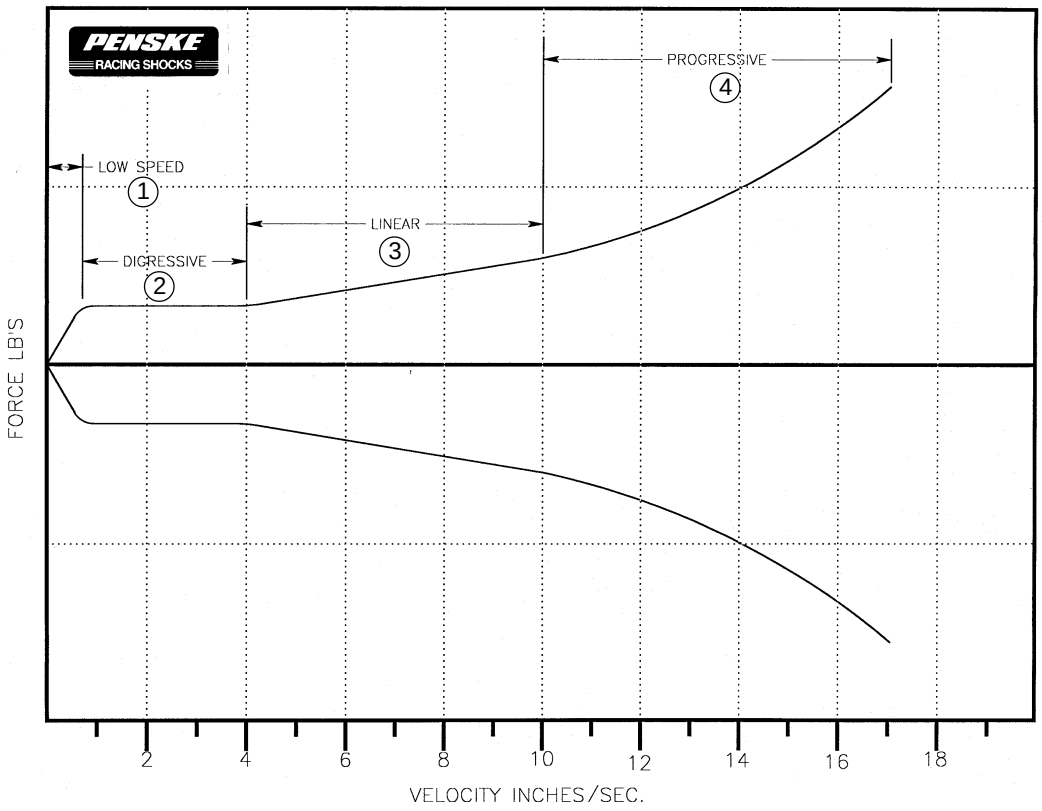

1. Low Speed - Bleed, Nose Profile
2. Digressive - Preload, Outer Stack
3. Linear - Inner Stack
4. Progressive - Orifice, Inner Stack

Damping Adjustments

There are three major ways in which you can vary the damping produced by the main piston: Shim stiffness, shim pre-load and the amount of bleed past the shims. These graphs help to visualize the way in which the damping is affected by each of these changes.

Figure 1 shows the effect of changing the pre-load (on digressive or VDP pistons) or dish (on linear pistons). Adding pre-load will create a lot more low speed damping. In compression, it will cause the tire to be loaded quicker and give a “snappy” feel. In rebound, it will help to tie the vehicle down and let it take a set quicker.

Figure 2 shows the effect of increasing the stiffness of the shim stack. Increasing the thickness of the shim stack (i.e., .004 to .010) stiffens the damping rate of the shock across the whole velocity range. While the other two adjustments only affect the lower shaft speeds, the shim stiffness is the best way to adjust damping at higher shaft speeds. The shims give the damping that chassis dynamics require.

Figure 3 shows the effect of adding bleed to the piston. Bleed is simply a low speed bypass for the shims and softens the shock at lower shaft speeds. This will improve the compliance of the chassis to the ground under low amplitude movements which can improve grip. It will give the driver a softer ride, but will let the chassis move more and take away support.

Figure 1

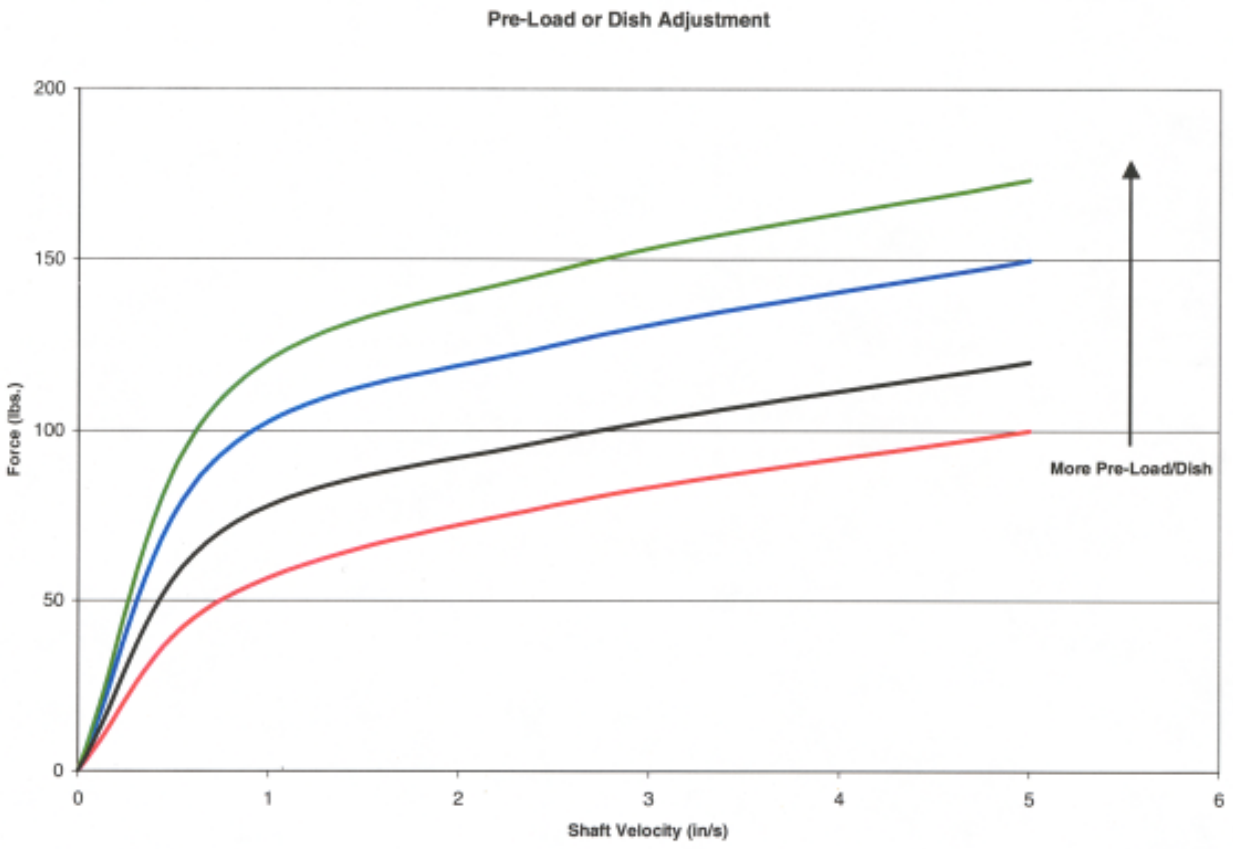

Damping Adjustments

Figure 2

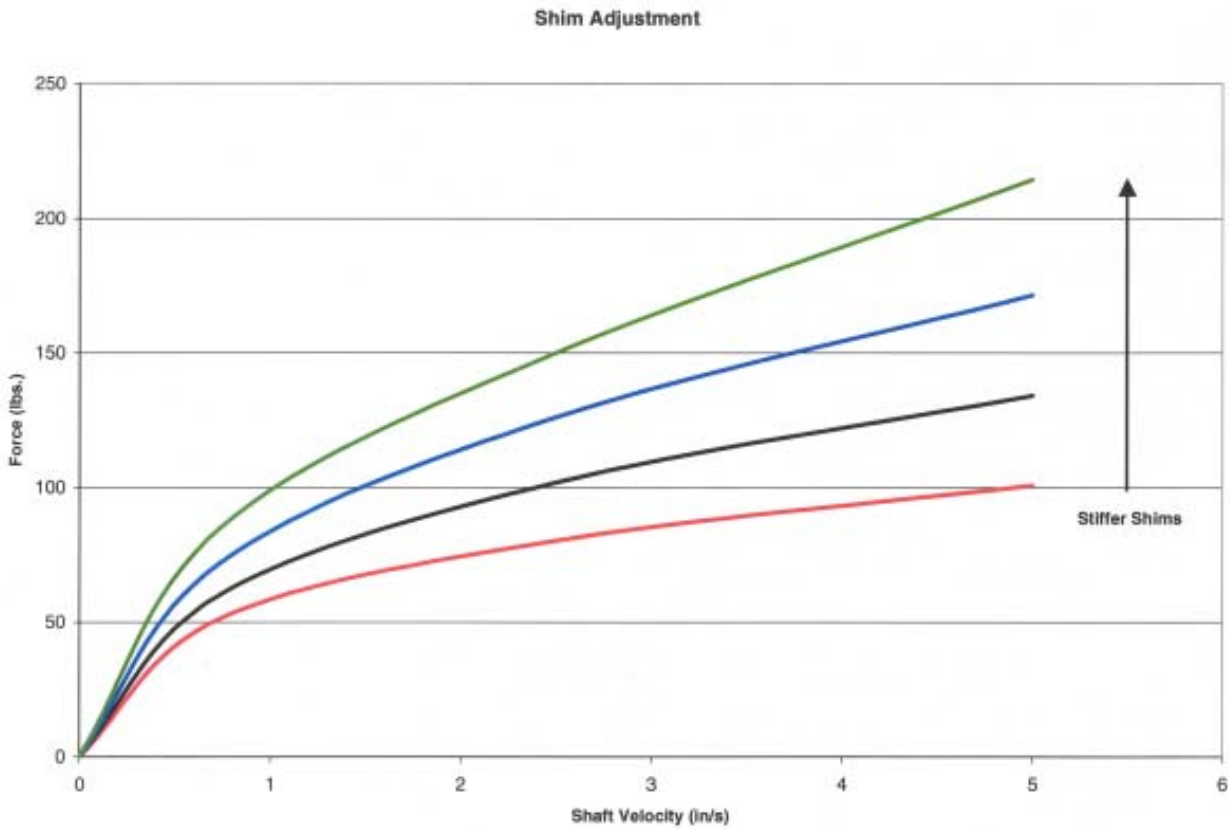

Figure 3

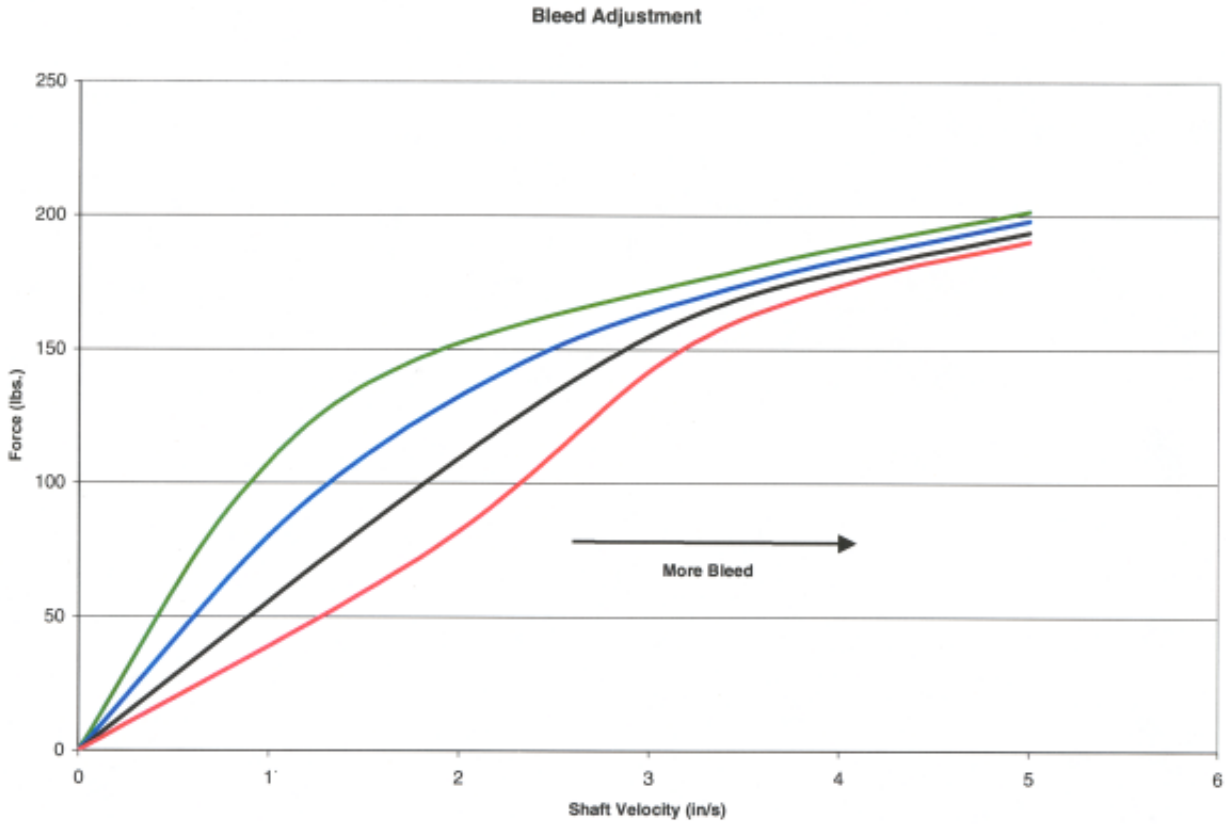

Dyno Graph Overview

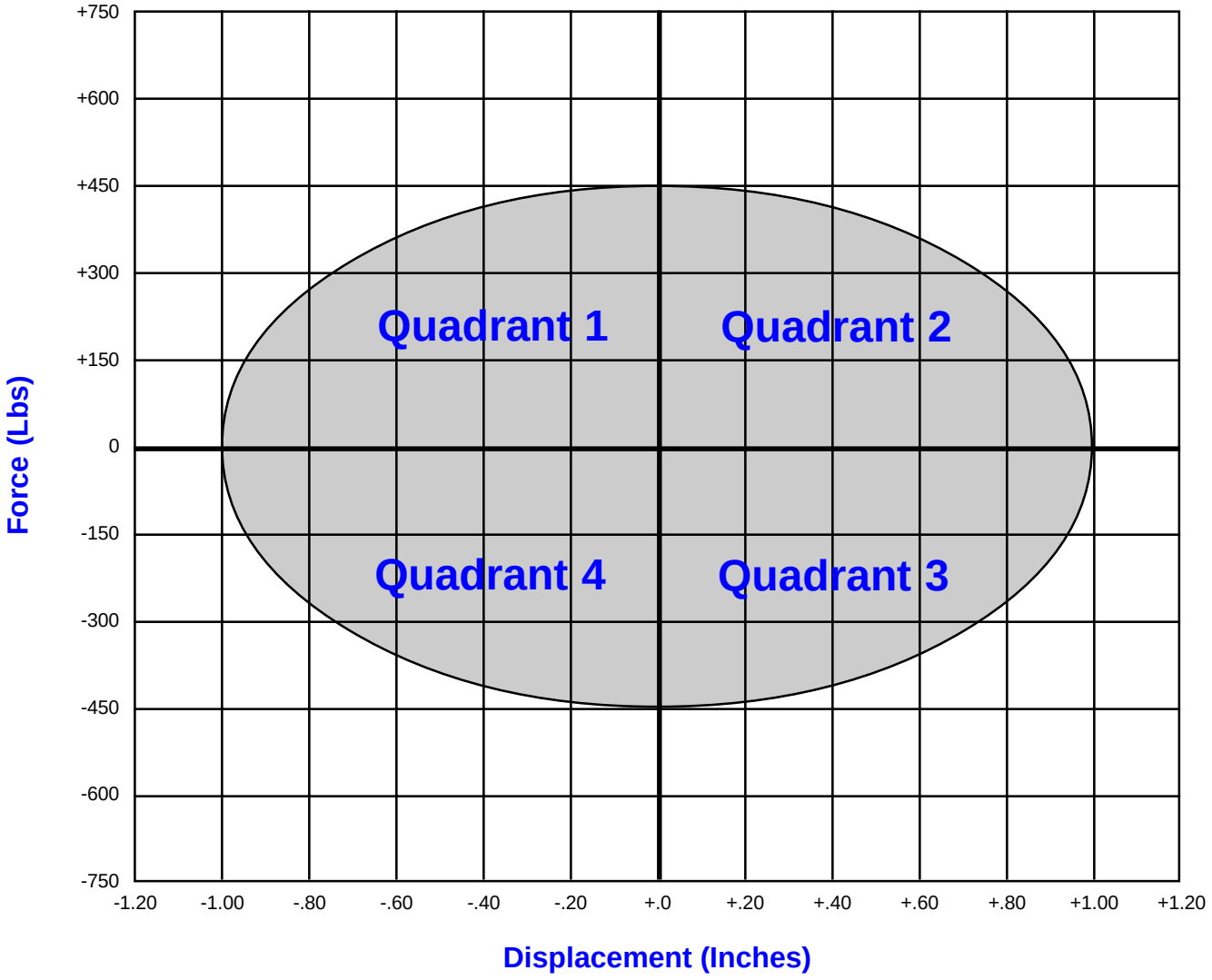

This section of the manual illustrates different valving combinations in the form of graphs. The graph shown is force vs. displacement graph. The force vs. displacement graph is a very accurate and simple way to assess valving characteristics. If you are not familiar with this type of graph, it is explained on the following page along with the graph above, showing the four different quadrants.

Dyno Graph Overview

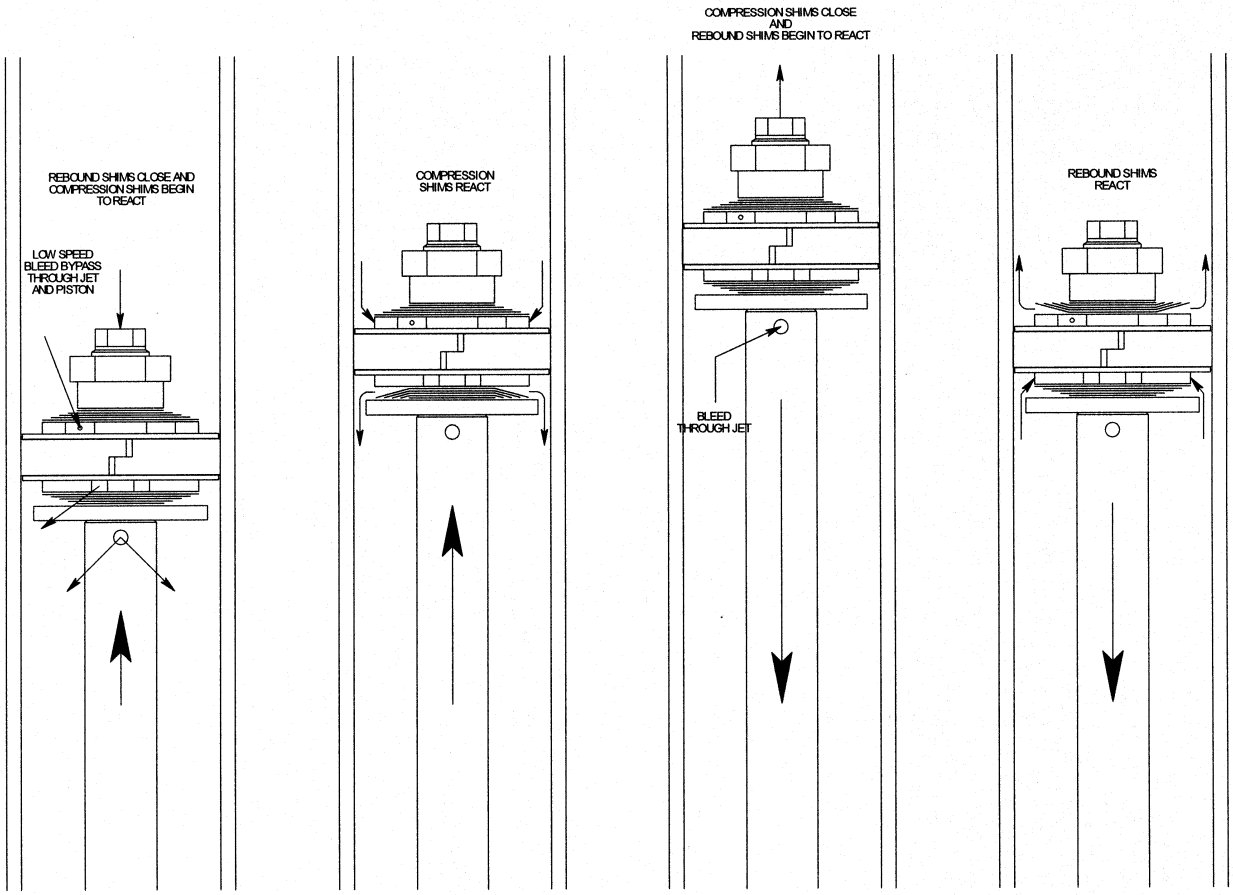

QUADRANT #1

This is the beginning of the compression stroke. Where the graph crosses the zero line (pounds) in quadrant #1 begins the compression stroke. Approximately the first 1/2" of displacement is formed with relation to the low speed bleed bypass. When the shaft reaches a certain velocity, the low speed bleed bypass shuts off and the compression valve stack begins to react.

QUADRANT #2

This quadrant begins with the compression valve stack open. Where the graph crosses the zero line (inches) in quadrant #2 is the maximum force produced by the compression valving. As the shock approaches the full compression point, the compression valve stack begins to close as it approaches the rebound movement.

QUADRANT #3

This quadrant begins with the shock at full compression and the compression valve stack closed. Where the graph crosses the zero line (pounds) in quadrant #3 begins the rebound stroke. Approximately the first 1/2" of displacement is formed with relation to the rebound bleed through the shaft and jet. When the shaft reaches a certain velocity, the bleed shuts off and the rebound valve stack begins to react.

QUADRANT #4

This quadrant begins with the rebound valve stack open. Where the graph crosses the zero line (inches) in quadrant #4 is the maximum force produced by the rebound valving. As the shock approaches the full extension point, the rebound valve stack begins to close as it approaches the compression movement. At this point the cycle starts over again in quadrant #1.

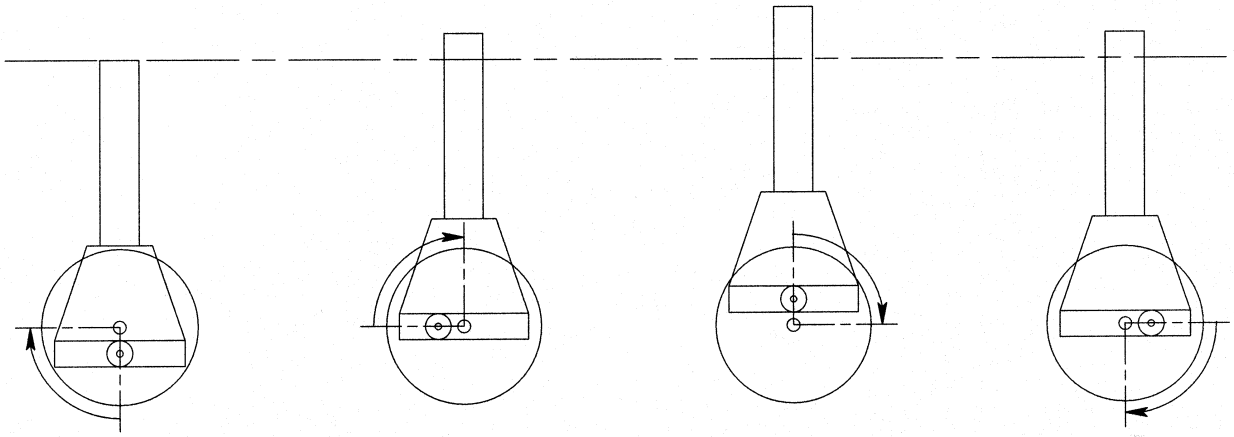

An easy way to help picture what is going on here is to relate the graph's shape to what the dyno is doing to the shock. The dyno uses a scotch yoke system (shown above), where the motor turns a crank and the sliding yoke allows the main dyno shaft to make the up and down movement at the preset stroke. The dyno software takes thousands of measurements throughout a single revolution of the crank. The sampled points are connected to form the graph. By relating the crank's position to the corresponding graph quadrant and the circular crank movement may help in reading the graphs.

Dyno Graph Overview

Penske Racing Shocks uses SPA Dynamometers because of its versatility and low speed metering and sample rates. Penske Shocks primarily uses the Force Average display, but SPA offers Decelerating CD/Accelerating RD and Accelerating CD/Decelerating RD viewing options for all its graph displays.

Force / Velocity Average

This graph shows the averages of the accelerating and decelerating compression and rebound forces. It is a good quick, general review of the shock curve, but is the least accurate of the options displayed.

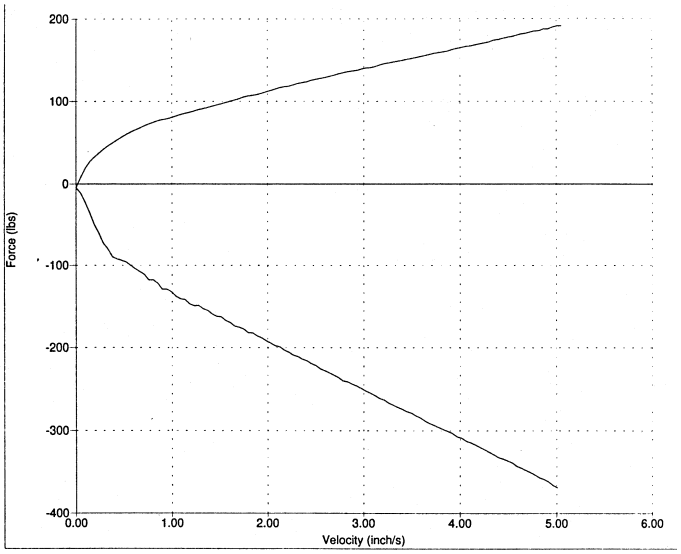

Force / Velocity

This graph displays the accelerating and decelerating compression and rebound forces. Think of this graph as the Force / Displacement graph (below) folded in half.

* Hysteresis is the gap between accelerating and decelerating compression and rebound damping. It is affected by the type of piston, the shims used and the relative position of high and low speed adjusters. The bleed hole will close the gap or soften the low speed forces.

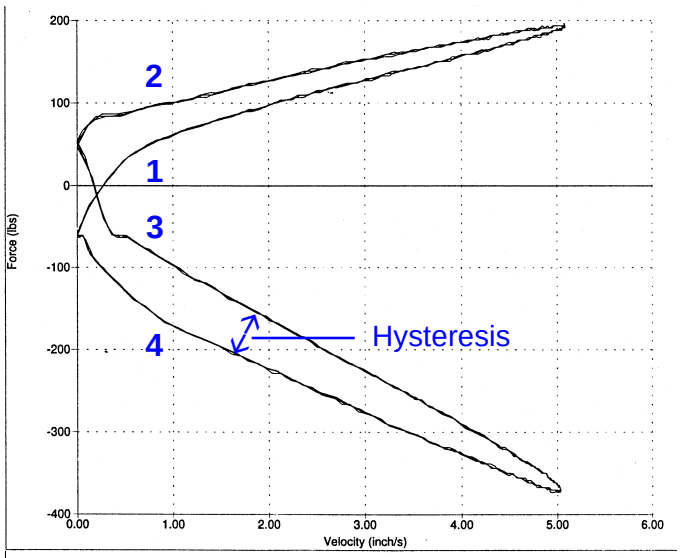

OVAL (Force / Displacement)

QUADRANT #1
This is the beginning of the compression stroke. Where the graph crosses the zero line (pounds) in quadrant #1 begins the compression stroke. Approximately the first 1/2" of displacement is formed with relation to the low speed bleed bypass. When the shaft reaches a certain velocity, the low speed bleed bypass chokes off and the compression valve stack begins to react.

QUANDRANT #2
This quadrant begins with the compression valve stack open. Where the graph crosses the zero line (inches) in quadrant #2 is the maximum force produced by the compression valving. As the shock approaches the full compression point, the compression valve stack begins to close as it approaches the rebound movement.

QUADRANT #3
This quadrant begins with the shock at full compression and the compression valve stack closed. Where the graph crosses the zero line (pounds) in quadrant #3 begins the rebound stroke. Approximately the first 1/2" of displacement is formed with relation to the rebound bleed through the shaft and jet. When the shaft reaches a certain velocity, the bleed chokes off and the rebound valve stack begins to react.

QUADRANT #4
This quadrant begins with the rebound valve stack open. Where the graph crosses the zero line (inches) in quadrant #4 is the maximum force produced by the rebound valving. As the shock approaches the full extension point, the rebound valve stack begins to close as it approaches the compression movement. At this point the cycle starts over again in quadrant #1.

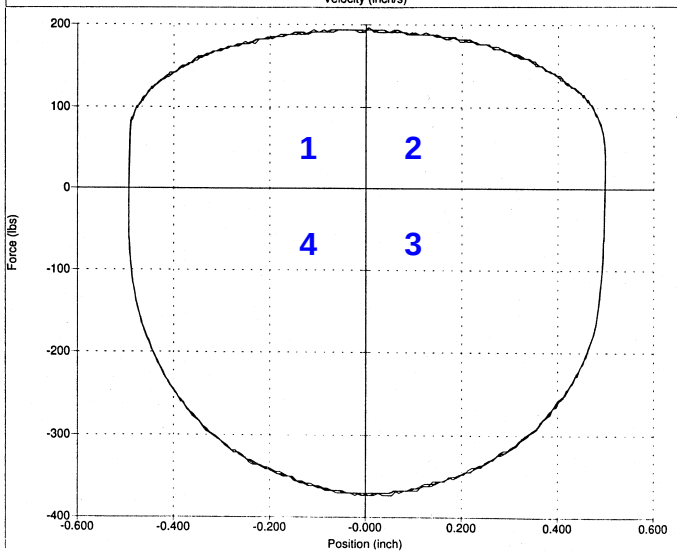

Dyno Graph Overview

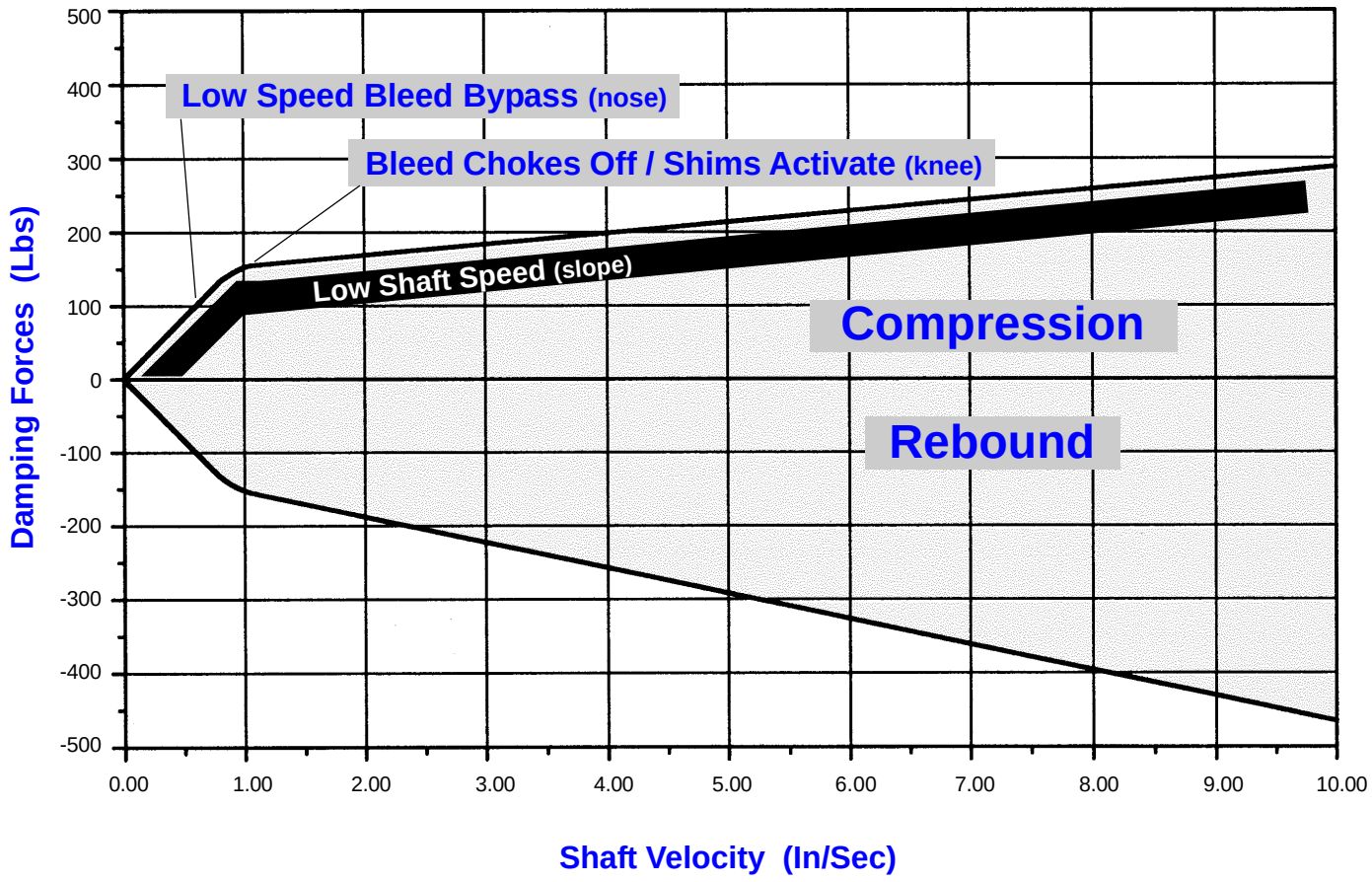

Note: Remember that low speed damping characteristics are controlled by bleed through the low speed adjuster and the bleed hole in the piston, not the valve stacks.

Notes